NEW SPENCER COUNTY BUS GARAGE

1430 TOWNHILL ROAD
TAYLORSVILLE, KENTUCKY 40071

BG# 17-261
SCB PROJECT NO. 1745
CONSTRUCTION DOCUMENTS
NOVEMBER 25, 2019

OWNER:

SPENCER COUNTY BOARD OF EDUCATION

SANDY CLEVENGER, BOARD CHAIR
JANET BONHAM, VICE CHAIR
DEBBIE HERNDON
LYNN SHELBURNE
JEANIE STEVENS
CHARLES ADAMS, SUPERINTENDENT

INDEX TO DRAWINGS

SITE
SITE SURVEY
DS1.0 SITE DEMOLITION PLAN
SD1.0 OVERALL SITE DEVELOPMENT PLAN
SD1.1 ENLARGED SITE DEVELOPMENT PLAN
SD2.0 SITE GRADING AND DRAINAGE PLAN
SD2.1 EROSION AND SEDIMENT CONTROL PLAN
SD3.0 SITE DETAILS
SD4.0 SITE DETAILS

STRUCTURAL
S0.1 STRUCTURAL NOTES
S0.2 STRUCTURAL NOTES
S0.3 STRUCTURAL NOTES, SPECIAL INSPECTIONS
S1.1 FOUNDATION PLAN
S1.2 MEZZANINE FLOOR FRAMING PLAN
S1.3 ROOF FRAMING PLAN
S2.0 TYPICAL FOUNDATION DETAILS & FOUNDATION SCHEDULES
S2.1 FOUNDATION SECTIONS AND DETAILS
S2.2 FOUNDATION SECTIONS AND DETAILS
S3.0 METAL BUILDING COLUMN LOAD SCHEDULE AND STEEL BEAM SCHEDULE
S3.1 TYPICAL STEEL FRAMING DETAILS
S4.0 MASONRY HEADER BEAM SCHEDULE, TYPICAL MASONRY DETAILS
S5.1 MEZZANINE - STEEL FRAMING SECTIONS AND DETAILS
S5.2 MEZZANINE - STEEL FRAMING SECTIONS AND DETAILS

ARCHITECTURAL
A-0 ABBREVIATIONS, SYMBOL LEGEND, GENERAL NOTES AND PARTITION TYPES
A-1 FIRST FLOOR PLAN, REFLECTED CEILING PLAN, ENLARGED FLOOR PLANS, AND DETAILS
A-2 ROOF PLAN AND DETAILS
A-3 BUILDING ELEVATIONS AND DETAILS
A-4 DOOR SCHEDULE AND DETAILS

SITE UTILITIES
U1 PLUMBING SITE UTILITIES PLAN
U2 ELECTRICAL SITE UTILITIES PLAN

PLUMBING
P0 PLUMBING LEGEND
P1 FLOOR PLANS - PLUMBING
P2 PLUMBING RISERS
P3 PLUMBING DETAILS
P4 PLUMBING SCHEDULES

MECHANICAL
M0 MECHANICAL LEGEND
M1 FLOOR PLANS - MECHANICAL
M2 MECHANICAL DETAILS
M3 MECHANICAL SCHEDULES

ELECTRICAL
E0 ELECTRICAL LEGEND
E1 FLOOR PLANS - ELECTRICAL
E2 ELECTRICAL GENERAL NOTES
E3 ELECTRICAL DETAILS
E4 ELECTRICAL SCHEDULES & POWER ONE-LINE DIAGRAM

CODE INFORMATION

CODE:	KENTUCKY BUILDING CODE, 2ND EDITION, APRIL 2019
USE GROUP:	S-1 (MOTOR VEHICLE REPAIR GARAGE)
CONSTRUCTION TYPE:	II B
FIRE PROTECTION:	NOT REQUIRED PER KBC 903.2.9 < 12,000 SP.
FIRE SEPARATIONS:	NONE REQUIRED PER KBC TABLE 508.4
ALLOWABLE HEIGHT (TABLES 504.3 & 504.4):	55'-0" / 2 STORIES
ACTUAL HEIGHT:	22'-0" / 1 STORY
ALLOWABLE AREA (TABLE 506.2):	17,500 SF
ACTUAL AREA:	6,425 SF
MAX. ALLOWABLE TRAVEL DISTANCE TO EXIT:	250 FT
ACTUAL DISTANCE:	41 FT

SPECIAL INSPECTIONS

REFER TO STRUCTRAL DRAWINGS FOR SPECIAL INSPECTIONS REQUIREMENTS.

ENERGY CODE COMPLIANCE

ASHRAE 90.1 - 2010
COMCHECK SUBMITTED UNDER SEPARATE COVER

MECHANICAL/ELECTRICAL ENGINEER

SHROUT TATE WILSON
MECHANICAL AND ELECTRICAL ENGINEERS
628 WINCHESTER ROAD
LEXINGTON, KY 40505
P (859) 277-8177 F (859) 277-8372

STRUCTURAL ENGINEER

SHERMAN CARTER BARNHART
ARCHITECTS, PLLC
9300 SHELBYVILLE ROAD
HURSTBOURNE PLACE SUITE 502
LOUISVILLE, KY 40222
P (502) 721-6100 F (859) 721-6111

LANDSCAPE ARCHITECT / CIVIL ENGINEER

SHERMAN CARTER BARNHART ARCHITECTS, PLLC
2405 HARRODSBURG RD.
LEXINGTON, KY 40504
P (859) 224-1351 F (859) 224-8446

SHERMAN CARTER BARNHART ARCHITECTS

SHERMAN CARTER BARNHART ARCHITECTS, PLLC

PROJECT MANAGER:
ALLISON COMMINGS

2405 HARRODSBURG ROAD
LEXINGTON, KY 40504-3329
PHONE: 859.224.1351
FAX: 859.224.8446

www.scbarchitects.com

SCB PROJECT #1745

1745
NEW SPENCER COUNTY BUS GARAGE
12/16/2019 9:12:50 AM

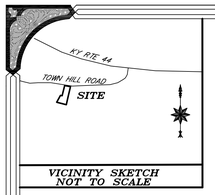

VICINITY SKETCH
NOT TO SCALE

ALL DATA SHOWN HEREON IS BASED ON KENTUCKY SINGLE ZONE STATE PLANE COODINATE SYSTEM NAD83 (2011) EPOCH 2010. ALL ELEVATION ARE NAVD88 (GEOID12B).

NOTE: NO TITLE REPORT WAS PROVIDED FOR THIS SURVEY. NO SUBSURFACE LOCATION HAS BEEN COMPLETED AND THEREFOR ALL UNDERGROUND UTILITES SHOULD BE FIELD VERIFIED PRIOR TO ANY CONSTRUCTION.

NO UNDERGROUND UTILITY LOCATION SERVICES WERE COMPLETED PRIOR TO THIS SURVEY OR UP TO THE REVISION DATE ON THIS SURVEY. ALL UTILITY LOCATIONS MUST BE VERIFIED PRIOR TO ANY EXCAVATION.

THIS PROPERTY IS LOCATED IN ZONE X "AREAS OF MINIMUL FLOOD HAZARD" AS SHOWN ON FEMA FLOOD MAP 21215C0112C EFFECTIVE DATE 8-3-2009

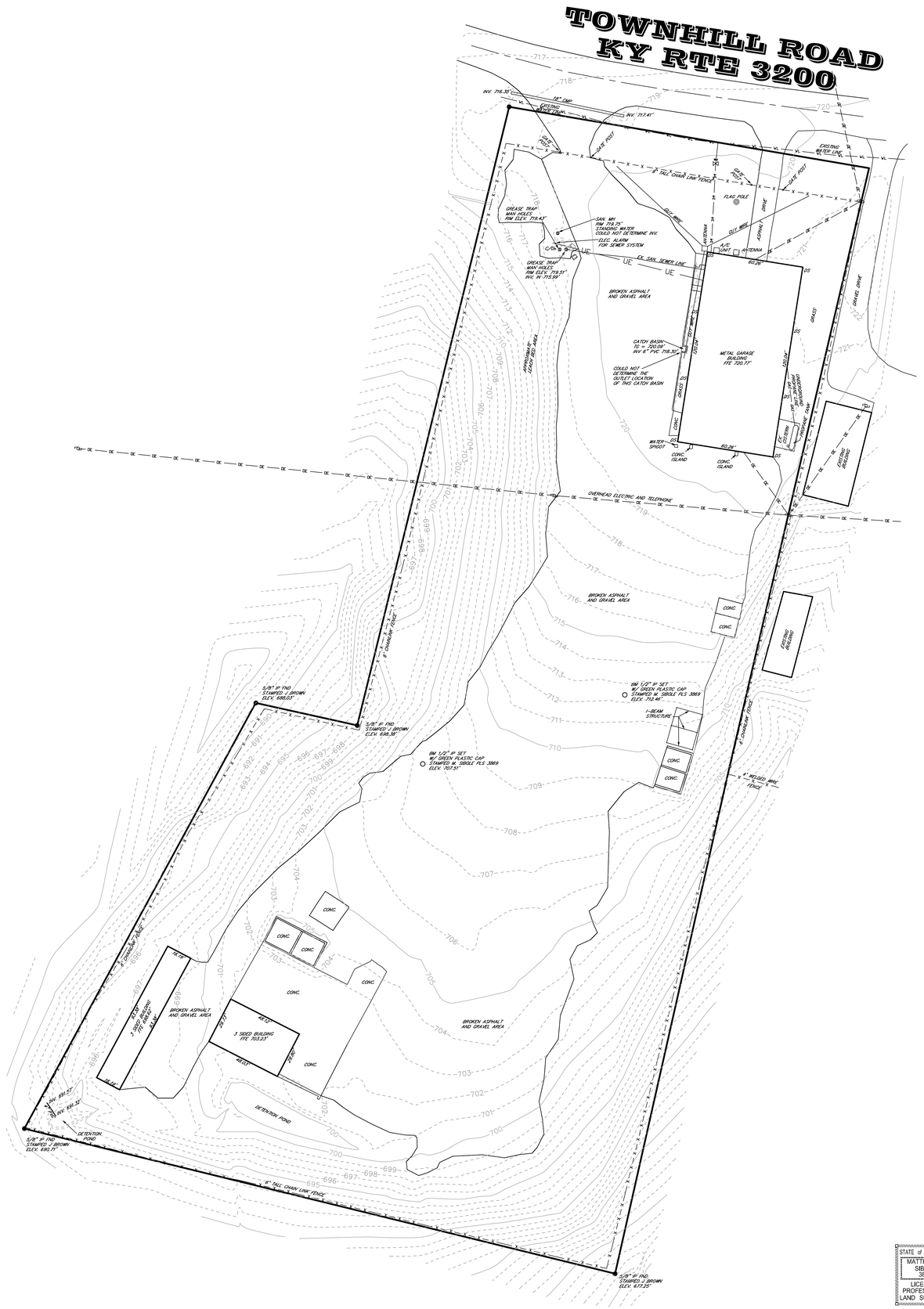

PLAT OF SURVEY
FOR

SPENCER COUNTY SCHOOLS

SITUATED IN

SPENCER COUNTY
KENTUCKY

LEGEND

- ● DENOTES: 5/8" IRON PIN FOUND OTHERWISE NOTED
- DENOTES LIGHT POLE
- DENOTES UTILITY POLE
- DENOTES SANITARY MAN HOLE
- OE — DENOTES OVERHEAD ELECTRIC
- UE — DENOTES UNDERGROUND ELECTRIC
- WL — DENOTES WATER LINE
- GAS — DENOTES GAS LINE

0 15 30 45 60
GRAPHIC SCALE IN FEET

STATE of KENTUCKY
MATTHEW D. SIBOLE
3869
LICENSED PROFESSIONAL LAND SURVEYOR

SURVEYOR'S CERTIFICATION

I HEREBY CERTIFY THAT THIS PLAT DEPICTS A TOPOGRAPHIC SURVEY MADE BY ME OR UNDER MY DIRECT SUPERVISION. THIS TOPOGRAPHIC SURVEY DOES NOT CONSTITUTE A BOUNDARY SURVEY. ALL BOUNDARY INFORMATION SHOWN ON THIS PLAT IS TAKEN FROM RECORDS PROVIDED BY THE CLIENT. THIS PLAT MEETS OR EXCEEDS THE MINIMUM STANDARDS OF PRACTICE FOR PROFESSIONAL SURVEYORS IN KENTUCKY.

7-16-19
DATE
MATTHEW D. SIBOLE
KENTUCKY PROFESSIONAL LAND SURVEYOR NO. 3869

TOPOGRAPHIC SURVEY

PROPERTY BELONGING TO
SPENCER COUNTY BOARD OF EDUCTION
520 TAYLORSVILLE ROAD
TAYLORSVILLE, KENTUCKY 40071

THIS TOPOGRAPHIC SURVEY DOES NOT CONSTITUTE A BOUNDARY SURVEY
BOUNDARY LINE INFORMATION IS SHOWN BASED ON PROVIDED DOCUMENTS

TOPOGRAPHIC SURVEY OF A 4.43 ACRE TRACT
AS SURVEYED BY BROWN LAND SURVEYING CO.
ON MARCH 28, 2018. LOCATED AT 1430 TOWNHILL ROAD
TAYLORSVILLE, KENTUCKY 40071

LOCATED ALONG THE SOUTH R/W OF TOWNHILL ROAD
WEST OF KENTUCKY HIGHWAY 44, SPENCER COUNTY, KY

SCALE: 1"= 30'	
DATE: 7/16/2019	
REV:	
DWN BY: M.D.S	
JOB NO.: 19087	

MATTHEW SIBOLE SURVEYING
PROUDLY SERVING ALL OF KENTUCKY
P.O. BOX 1008
BRANDENBURG, KENTUCKY 40108
270-422-7737

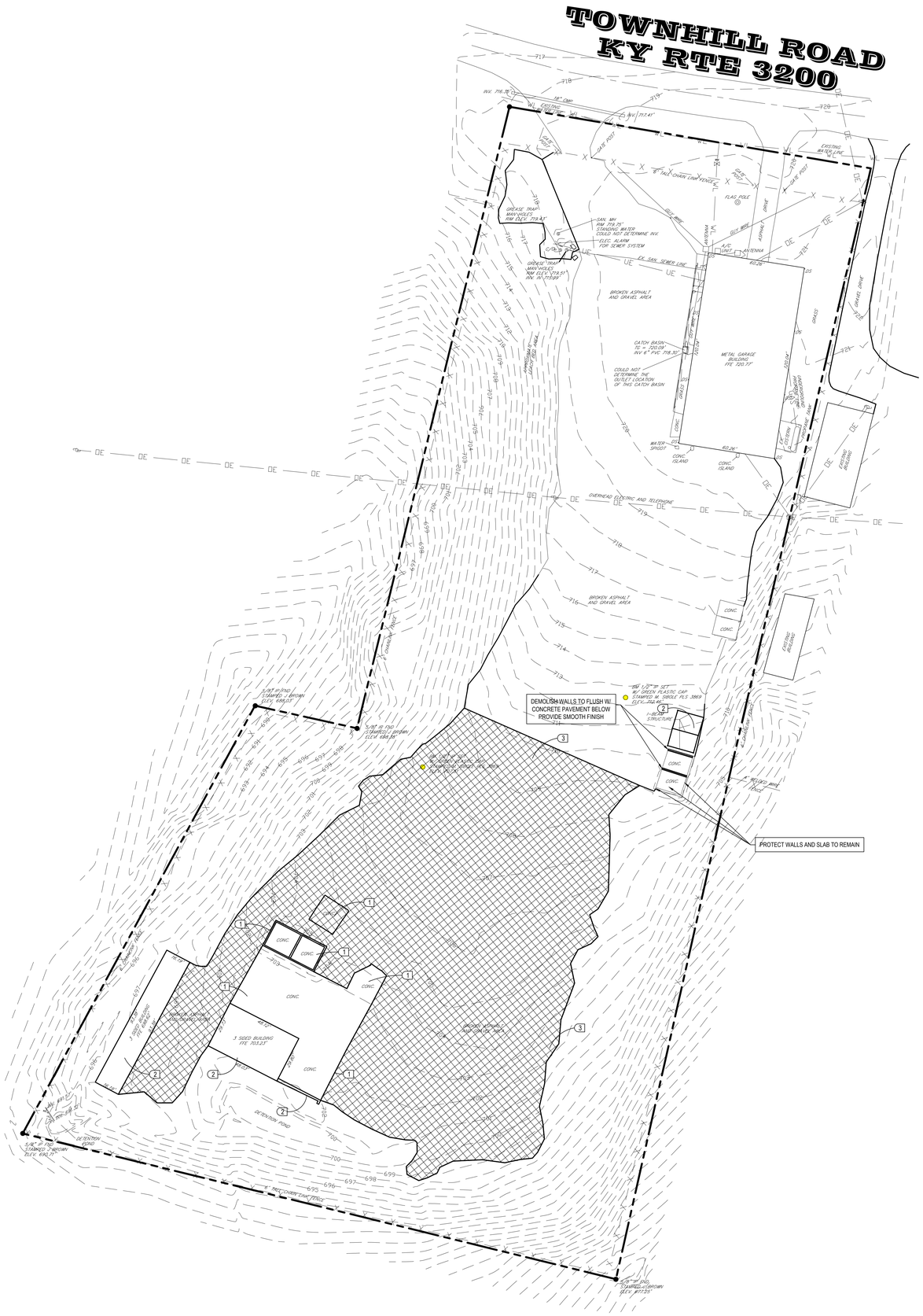

SITE DEMOLITION KEY

1. EXISTING CONCRETE AND GRAVEL SUB-BASE TO BE REMOVED COMPLETELY
2. REMOVE EXISTING BUILDING, FOUNDATIONS, SLAB, SUBBASE AND ASSOCIATED UTILITIES COMPLETELY
3. RUBBLIZE PAVEMENT AND RESUSE PER DIRECTION OF ONSITE GEOTECHNICAL ENGINEER

GENERAL DEMOLITION NOTES:

1. THE CONTRACTOR SHALL REVIEW ALL DOCUMENTS AND VISIT AND OBSERVE THE SITE PRIOR TO SUBMITTING HIS BID AND SHALL INCLUDE IN HIS BID ALL WORK NECESSARY TO ACCOMPLISH THE NEW WORK, WHETHER OR NOT SHOWN ON THESE DEMOLITION DRAWINGS.
2. REFER TO SITE UTILITY PLANS FOR DEMOLITION AND/OR RELOCATION OF UTILITIES.
3. FOR CONCRETE REMOVAL, REMOVE TO THE NEAREST CONSTRUCTION JOINT. PROVIDE A CLEAN SAW CUT JOINT TO ALL EXISTING EDGES OF CONCRETE TO REMAIN.
4. ALL DEMOLISHED MATERIALS NOT SPECIFICALLY NOTED TO BE RETURNED TO OWNER OR DISPOSED OF IN SOME OTHER MANNER, ARE TO BE PROPERLY DISPOSED OF OFFSITE.

JOB SITE SAFETY

THE CONTRACTOR IS SOLELY RESPONSIBLE FOR JOB SITE SAFETY DURING CONSTRUCTION. JOB SITE SAFETY IS OUTSIDE THE SCOPE OF WORK OF SHERMAN CARTER BARNHART (SCB). NEITHER THE PROFESSIONAL ACTIVITIES OR THE PRESENCE OF SCB EMPLOYEES OR SUBCONSULTANTS AT THE CONSTRUCTION SITE SHALL RELIEVE THE CONTRACTOR OR ANY OTHER ENTITY OF THEIR OBLIGATION, DUTIES, AND RESPONSIBILITIES INCLUDED, BUT NOT LIMITED TO, CONSTRUCTION MEANS, METHODS, SEQUENCES, TECHNIQUES, TO PROCEDURES NECESSARY FOR PERFORMING SUPERINTENDING OR COORDINATING ALL PORTIONS OF THE WORK OF CONSTRUCTION IN ACCORDANCE WITH THE CONTRACT DOCUMENTS AND ANY HEALTH AND SAFETY PRECAUTIONS REQUIRED BY GOOD CONSTRUCTION PRACTICES OR ANY REGULATORY AGENCIES. ANYONE USING INFORMATION FROM THESE PLANS ACKNOWLEDGES AND WARRANTS THAT SHERMAN CARTER BARNHART IS NOT RESPONSIBLE FOR SITE SAFETY IN ANY WAY.

UTILITIES

THE UTILITIES ARE SHOWN ON THE DRAWINGS AS ACCURATELY AS THEY HAVE BEEN PROVIDED TO THE ARCHITECT. THEIR LOCATIONS ARE NOT GUARANTEED. IT IS THE CONTRACTORS RESPONSIBILITY TO CONTACT ALL UTILITY COMPANIES AND TO HAVE ALL UTILITIES FIELD LOCATED, PRIOR TO STARTING CONSTRUCTION. THE UTILITIES SHOWN REPRESENT OBSERVABLE FEATURES ALONG WITH INFORMATION PROVIDED BY THE RESPECTIVE UTILITY COMPANIES, AND IS THEREFORE NOT WARRANTED. PRIOR TO CONSTRUCTION THE CONTRACTOR IS TO FIELD VERIFY ALL UTILITY LOCATIONS, SIZES, TYPE ETC. NEEDED TO COMPLETE THE WORK OF THE CONTRACT.

THE CONTRACTOR SHALL NOTIFY THE ARCHITECT IF A CONFLICT COULD EXIST. IF THE CONTRACTOR PROCEEDS WITHOUT CONTACTING THE UTILITY COMPANIES AND DOES NOT NOTIFY THE ARCHITECT OF POTENTIAL CONFLICTS HE DOES SO AT HIS OWN RISK.

LEGEND

PROPERTY LINE

RUBBLIZE PAVEMENT

SCALE: 1" = 30'-0"

SCALE IN FEET

0 15 30 120

SHERMAN CARTER BARNHART ARCHITECTS

NEW SPENCER COUNTY BUS GARAGE

TAYLORSVILLE, KENTUCKY

SITE DEMOLITION PLAN

JOB NO.	1745
DATE	12/16/2019
DRAWN	KRP
CHECKED	BKL

COPYRIGHT © 2019
SHERMAN CARTER BARNHART
ARCHITECTS, PLLC

REVISIONS

No.	Description	Date

SHEET

DS1.0

X:\Projects\2017\1745\SITE\1745-SD1X.dwg
Day & Time: Dec 12, 2019 - 4:51pm
User Name: krpowell
Sheet Layout: DS1.0

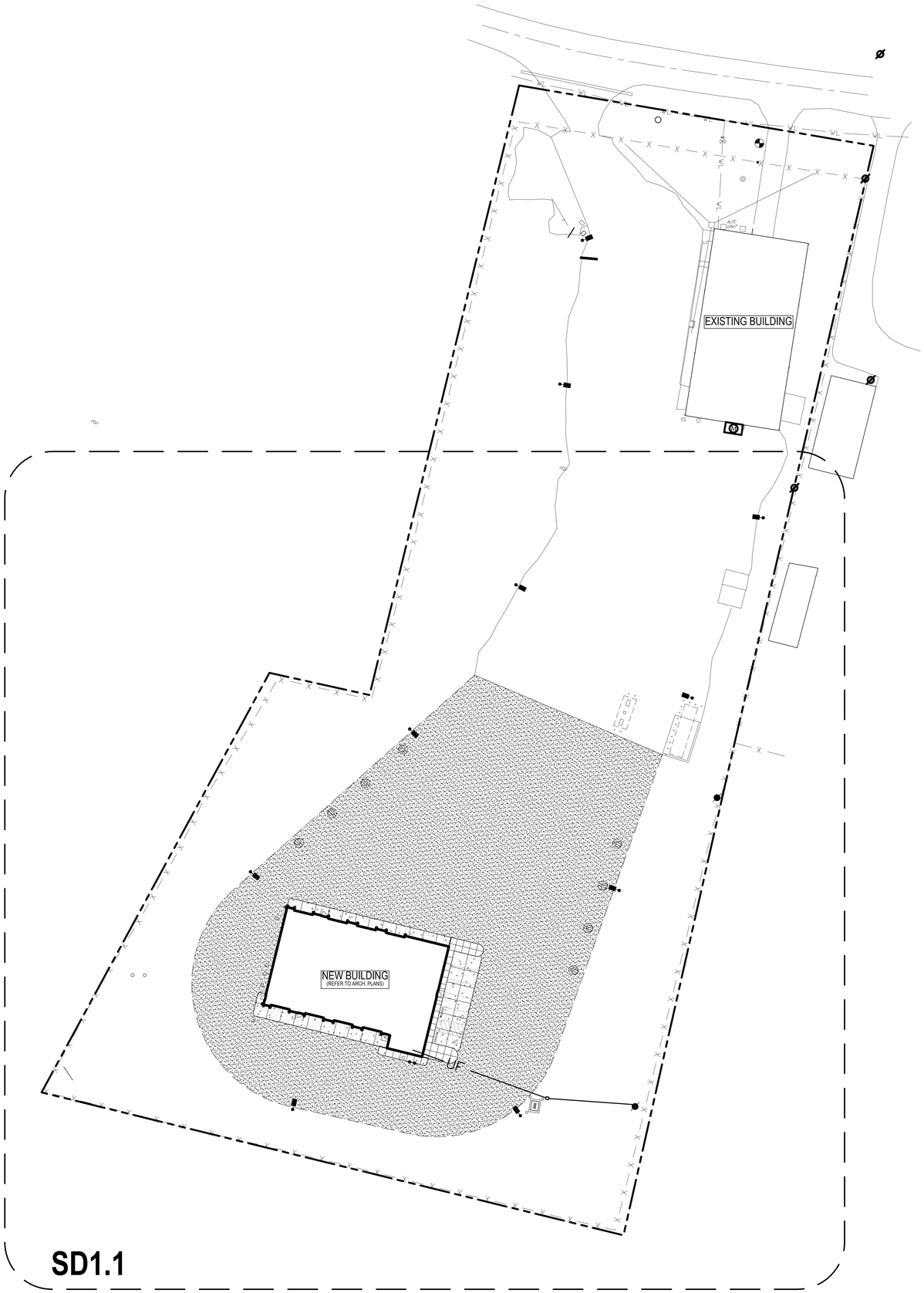

SCALE: 1" = 30'-0"

SCALE IN FEET

0 15 30 120

SHERMAN CARTER BARNHART ARCHITECTS

NEW SPENCER COUNTY BUS GARAGE

TAYLORSVILLE, KENTUCKY

OVERALL SITE DEVELOPMENT PLAN

JOB NO.	1745
DATE	12/16/2019
DRAWN	KRP
CHECKED	BKL

COPYRIGHT © 2019
SHERMAN CARTER BARNHART
ARCHITECTS, PLLC

REVISIONS

No.	Description	Date

SHEET

SD1.0

X:\Projects\2017\1745\SITE\1745-SD1X.dwg
Day & Time: Dec 12, 2019 - 4:51pm
User Name: krpatten
Sheet Layout: SD1.0

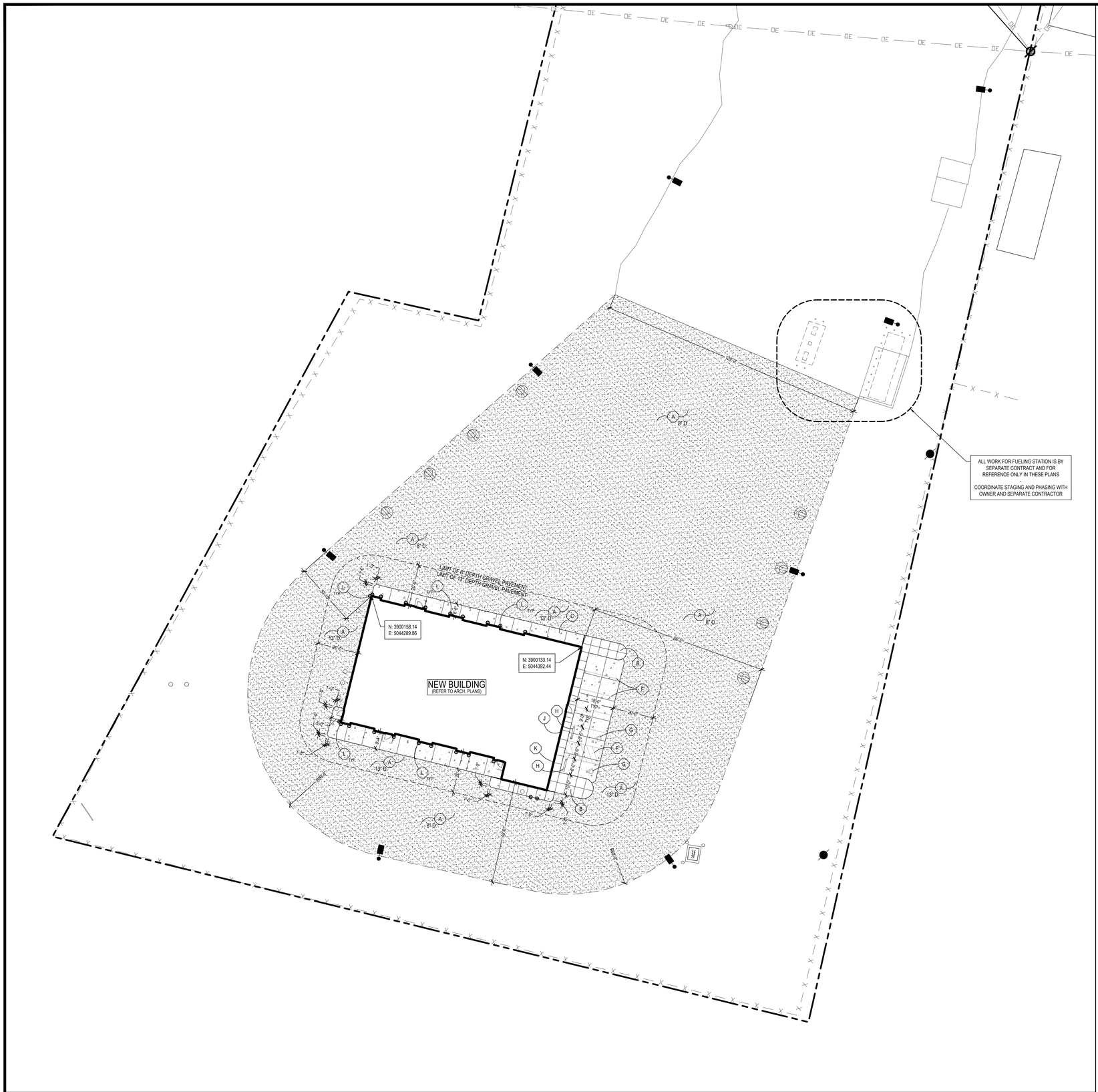

GENERAL NOTES:

1. PROVIDE 1/2" EXP. JT. MATERIAL W / SEALANT WHERE NEW CONC. CURBS, WALKS, OR PAVING ABUT STORM SEWER STRUCTURES, BUILDINGS, ETC.
2. AT END OF PROJECT, CONTRACTOR SHALL REMOVE ALL TEMPORARY FENCING, TEMPORARY EROSION CONTROL STRUCTURES, AND OTHER TEMPORARY SERVICES ON SITE.
3. ALL RADII ARE TO BE 5' UNLESS SHOWN OTHERWISE.
4. CONSTRUCTION SHALL BE IN ACCORDANCE WITH ALL LOCAL, STATE, FEDERAL GOVERNING AGENCIES.
5. ALL PERMITS AND BONDS ARE THE RESPONSIBILITY OF THE CONTRACTOR
6. ANY AREAS DAMAGED DUE TO CONSTRUCTION ACTIVITIES SHALL BE REPAIRED AT THE CONTRACTOR'S EXPENSE TO THE SATISFACTION OF THE OWNER. ALL GRASS AREAS DISTURBED DURING CONSTRUCTION SHALL RECEIVE SOD AND SHALL BE MAINTAINED UNTIL LAWN IS ESTABLISHED, AT NO ADDITIONAL COST TO THE OWNER.
7. STORM STRUCTURES ON THIS SHEET ARE FRO REFERENCE ONLY. REFER TO GRADING AND DRAINAGE PLANS FOR LOCATIONS, UNLESS OTHERWISE DIMENSIONED ON THIS SHEET.
8. UTILITIES ON THIS SHEET ARE FOR REFERENCE ONLY, REFER TO UTILITY PLANS FOR LOCATIONS. UNLESS OTHERWISE DIMENSIONED ON THIS SHEET.
9. CONTRACTOR TO COORDINATE STAGING, CONSTRUCTION ENTRANCE, AND NEW WORK WITH OWNER.
10. REFER TO STRUCTURAL AND ARCHITECTURAL DRAWINGS FOR CONCRETE WALK CONNECTION TO BUILDING SLAB AT DOORWAYS
11. CIVIL CAD FILES WILL BE AVAILABLE TO SUCCESSFUL CONTRACTOR FOR LAYOUT PURPOSES UPON CONTRACTOR SIGNING OF RELEASE FORM. ANY ADDITIONAL DIMENSIONS REQUIRED FOR LAYOUT SHALL BE REQUESTED BY THE CONTRACTOR.
12. WHERE NEW UTILITY WORK OCCURS IN EXISTING PAVEMENT (REFER TO MEP PLANS), CONTRACTOR SHALL CUT AND PATCH PAVEMENT AS REQUIRED TO COMPLETE NEW WORK AND RESTORE PAVEMENT USING NEW ASPHALT PAVEMENT SECTION (AP/SD3.0). WHERE NEW ASPHALT PAVEMENT ABUTS EXISTING ASPHALT PAVEMENT USE EDGEKEY (EK/SD3.0). CONTRACTOR SHALL BE RESPONSIBLE FOR COORDINATING WITH ALL DRAWINGS INCLUDING ALL SITE UTILITY DRAWINGS AND ASSOCIATED UTILITY TRENCHING

JOB SITE SAFETY:

THE CONTRACTOR IS SOLELY RESPONSIBLE FOR JOB SITE SAFETY DURING CONSTRUCTION. JOB SITE SAFETY IS OUTSIDE THE SCOPE OF WORK OF SHERMAN CARTER BARNHART (SCB). NEITHER THE PROFESSIONAL ACTIVITIES OR THE PRESENCE OF SCB EMPLOYEES OR SUBCONSULTANTS AT THE CONSTRUCTION SITE SHALL RELIEVE THE CONTRACTOR OR ANY OTHER ENTITY OF THEIR OBLIGATION, DUTIES, AND RESPONSIBILITIES INCLUDED, BUT NOT LIMITED TO, CONSTRUCTION MEANS, METHODS, SEQUENCES, TECHNIQUES, TO PROCEDURES NECESSARY FOR PERFORMING SUPERINTENDING OR COORDINATING ALL PORTIONS OF THE WORK OF CONSTRUCTION IN ACCORDANCE WITH THE CONTRACT DOCUMENTS AND ANY HEALTH AND SAFETY PRECAUTIONS REQUIRED BY GOOD CONSTRUCTION PRACTICES OR ANY REGULATORY AGENCIES. ANYONE USING INFORMATION FROM THESE PLANS ACKNOWLEDGES AND WARRANTS THAT SHERMAN CARTER BARNHART IS NOT RESPONSIBLE FOR SITE SAFETY IN ANY WAY.

ASPHALT NOTE:

EXISTING AND PROPOSED ROADS AND PARKING AREAS ARE NOT DESIGNED TO ACCOMMODATE HIGH LOADS CREATED BY CONSTRUCTION VEHICLES. CONTRACTOR SHALL MAINTAIN, STABILIZE, AND REPAIR SUBGRADE/STONE BASE AND EXISTING ASPHALT PAVEMENT DAMAGED BY CONSTRUCTION TRAFFIC AT NO ADDITIONAL COST TO THE OWNER.

SITE DETAILS KEY

KEY	DESCRIPTION	DETAIL
A	GRAVEL PAVEMENT	GP / SD3.0
B	CONCRETE WALK W/ TURNED DOWN EDGE	CW / SD3.0
C	CONCRETE PAVEMENT	CP / SD3.0
D	CONTROL JOINT	CW / SD3.0 & CP / SD3.0
E	EXPANSION JOINT W/ SEALANT	CW / SD3.0 & CP / SD3.0
F	4" W. WHITE PAINT STRIPE	REFER TO SPECS.
G	PAVING APPLIED GRAPHIC	PG / SD3.0
H	WHEEL STOP	WS / SD3.0
J	"ACCESSIBLE PARKING ONLY" PARKING SIGN	PS / SD3.0
K	"VAN ACCESSIBLE" PARKING SIGN	PS / SD3.0
L	BOLLARD	PB / SD3.0

LEGEND

PROPERTY LINE

x CHAIN LINK FENCE

A GRAVEL PAVEMENT
REFER TO DETAIL AP / SD3.0

C CONCRETE PAVEMENT
REFER TO DETAIL CP / SD3.0

D E 1:12 SLOPE B C CONCRETE WALK/PAVEMENT

SCALE: 1" = 20'-0" SCALE IN FEET

0 10 20 80

SHERMAN CARTER BARNHART ARCHITECTS

NEW SPENCER COUNTY BUS GARAGE

TAYLORSVILLE, KENTUCKY

ENLARGED SITE DEVELOPMENT PLAN

JOB NO.	1745
DATE	12/16/2019
DRAWN	KRP
CHECKED	BKL

COPYRIGHT © 2019
SHERMAN CARTER BARNHART
ARCHITECTS, PLLC

REVISIONS

No.	Description	Date

SHEET

SD1.1

X:\Projects\2017\1745\SITE\1745-SD1X.dwg
Day & Time: Dec 12, 2019 - 4:52pm
Login Name: krpitner
Sheet Layout: SD1.1

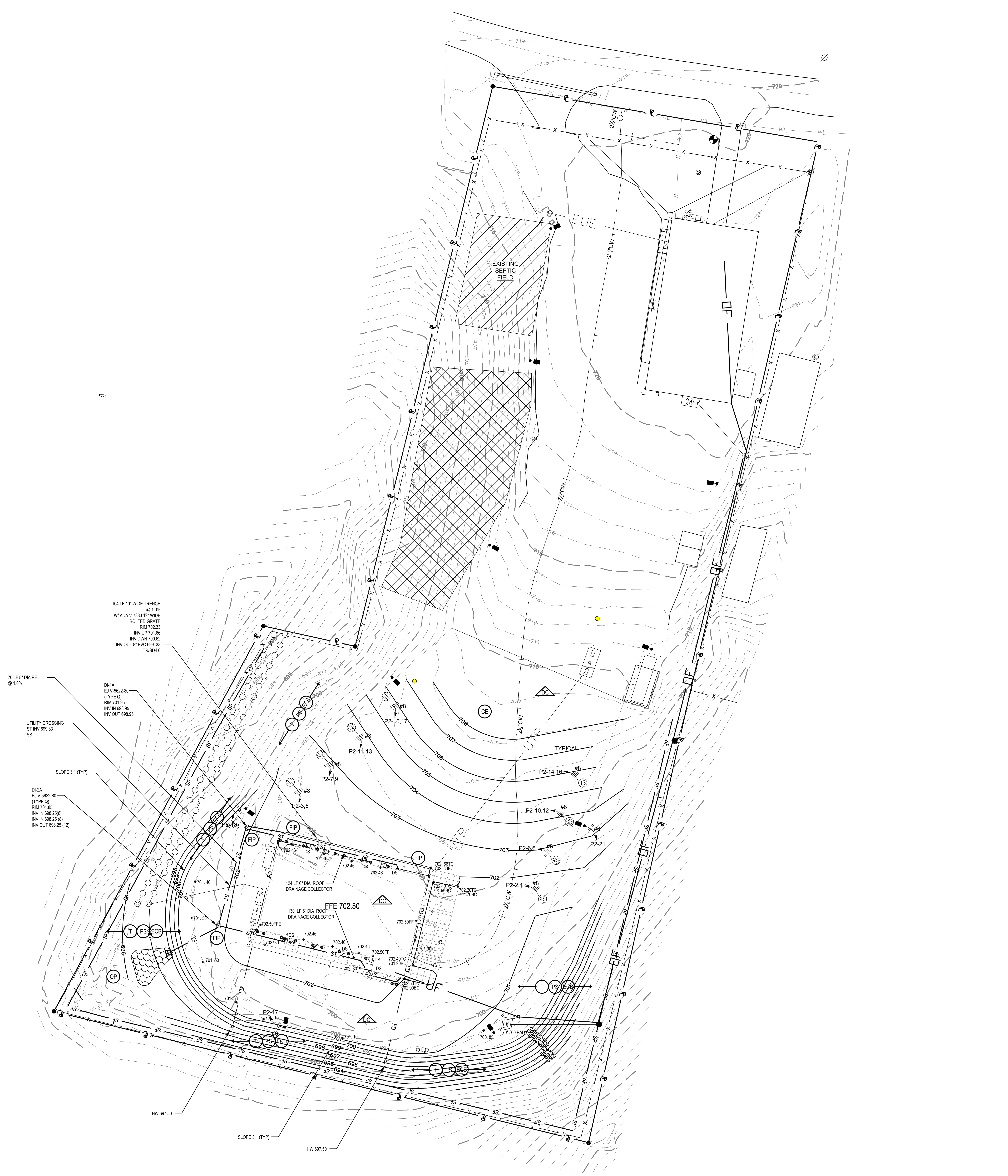

EROSION CONTROL LEGEND

SYMBOLS	DESCRIPTION
CE	TEMPORARY STONE CONSTRUCTION ENTRANCE CE/SD4.0
SF	SILT FENCE SF/SD4.0
ECB	EROSION CONTROL BLANKETS SHORT-TERM DEGRADABLE BLANKET NORTH AMERICAN GREEN SC150BN OR EQ. (ECB/SD4.0)
SLOPE STEPPER THAN 4:1 SLOPE STEPPER THAN 3:1	VELOCITY 8FPS & SHEAR STRESS 2.0 #/SQFT. VELOCITY 10FPS & SHEAR STRESS 2.5 #/SQFT. REFER TO MANUFACTURE SPECIFICATIONS FOR INSTALLATION REQUIREMENTS
PS	PERMANENT SEEDING REFER TO LANDSCAPING SPECIFICATION FOR DETAILS
MU	MULCHING
TS	TEMPORARY SEEDING
T	TOPSOILING
OP	OUTLET PROTECTION OP/SD4.1
FIP	FILTER FABRIC INLET PROTECTION FIP/SD4.1
DC	DUST CONTROL USE OF WATER SPRAY FOR DUST CONTROL DURING EARTH WORK AND DEMOLITION. DUST CONTROL WATER RUNOFF SHALL BE CONTAINED AND MANAGED PROPERLY TO PREVENT THE TRANSPORT OF CONTAMINANTS FROM SITE

EROSION SEDIMENT CONTROL NOTES

1. THE CONTRACTOR SHALL OBTAIN THE SERVICES OF THE APPROPRIATE PERSONNEL NEEDED TO CREATE AND MAINTAIN SWPPP, A BEST MANAGEMENT PRACTICES (BMP.) PLAN IN ACCORDANCE WITH, KPDES STORMWATER GENERAL PERMIT KYR10, AND "KENTUCKY EROSION PREVENTION AND SEDIMENT CONTROL FIELD GUIDE" .

2. THE EROSION CONTROL MEASURES NOTED AND SHOWN ARE MINIMUMS AND DO NOT RELIEVE THE CONTRACTOR FROM THE RESPONSIBILITY FOR COMPLIANCE WITH ANY AND ALL U.S. EPA AND / OR KENTUCKY DIVISION OF WATER REQUIREMENTS. CONTRACTOR IS RESPONSIBLE TO PROVIDE EROSION SEDIMENT CONTROL MEASURES IN ACCORDANCE WITH CONTRACTOR CONSTRUCTION METHODS AND SCHEDULE. ANY ADDITIONAL ITEMS THAT ARE REQUIRED BY THE GOVERNING AUTHORITIES SHALL BE PROVIDED AT NO ADDITIONAL COST TO THE OWNER WHETHER THEY APPEAR ON THIS PLAN OR NOT.

3. PRIOR TO BEGINNING CONSTRUCTION, THE CONTRACTOR SHALL BE RESPONSIBLE FOR SECURING ALL REQUIRED PERMITS ,AND NOTIFYING THE KENTUCKY DIVISION OF WATER IN WRITING OF INTENT TO DISTURB. THE CONTRACTOR SHALL OBTAIN, SIGN AND SUBMIT THE NOTICE OF INTENT (NOI) TO THE KENTUCKY DIVISION OF WATER. A COPY OF THE SUBMITTAL AND PERMIT SHALL BE SENT TO THE OWNER AND THE ARCHITECT.

4. ALL SILT FENCE SHALL BE INSTALLED PRIOR TO MOBILIZATION. SILT FENCES TO BE CLEANED OUT WHEN THEY BECOME ONE THIRD FULL OR AFTER EVERY RAIN IN EXCESS OF ONE HALF INCH.

5. THE CONTRACTOR SHALL HAVE QUALIFIED PERSONNEL INSPECT AND ENSURE THAT ROUTINE MAINTENANCE AND NONROUTINE REPAIR IS PERFORMED TO KEEP THE BMP IN GOOD WORKING ORDER. ALL SEDIMENT AND EROSION CONTROL DEVICES SHALL BE INSPECTED EVERY SEVEN (7) DAYS OR AFTER EACH RAINFALL OCCURRENCE THAT EXCEEDS ONE-HALF (1/2) INCH. IF SITE INSPECTIONS IDENTIFY BMPS THAT ARE DAMAGED OR ARE NOT OPERATING EFFECTIVELY, MAINTENANCE MUST BE PERFORMED AS SOON AS PRACTICAL OR AS REASONABLY POSSIBLE AND BEFORE THE NEXT STORM EVENT WHENEVER PRACTICABLE. DAMAGED OR INEFFECTIVE DEVICES SHALL BE REPAIRED OR REPLACED, AS NECESSARY.

6. STABILIZATION MEASURES SHALL BE INITIATED AS SOON AS PRACTICABLE IN PORTIONS OF THE SITE WHERE CONSTRUCTION ACTIVITIES HAVE TEMPORARILY OR PERMANENTLY CEASED. BARE SOIL AREAS MUST BE SEEDED, MULCHED OR COVERED AFTER 14 DAYS WHEN FINAL OR TEMPORARY GRADE IS ESTABLISHED IF NO WORK IS PLANNED IN THAT AREA DURING THE FOLLOWING 7 DAYS (I.E. 21 CONSECUTIVE DAYS) BUT IN NO CASE MORE THAN (21) DAYS AFTER WORK HAS CEASED, EXCEPT AS STATED BELOW.
WHERE STABILIZATION BY THE 21ST DAY IS PRECLUDED BY SNOW COVER OR FROZEN GROUND CONDITIONS STABILIZATION MEASURES MUST BE INITIATED AS SOON AS PRACTICABLE.
WHERE CONSTRUCTION ACTIVITY ON A PORTION OF THE SITE IS TEMPORARILY CEASED, AND EARTH-DISTURBING ACTIVITIES WILL BE RESUMED WITHIN 21 DAYS, TEMPORARY STABILIZATION MEASURES DO NOT HAVE TO BE INITIATED ON THAT PORTION OF THE SITE. TEMPORARY SEEDING SHALL BE PROVIDED IN ACCORDANCE WITH "KENTUCKY EROSION PREVENTION AND SEDIMENT CONTROL FIELD GUIDE"

7. TOPSOIL STOCKPILES AND BORROW SITES SHALL BE SURROUNDED BY SILT FENCES AND RESEEDED.

8. THE CONTRACTOR SHALL BE SOLELY RESPONSIBLE FOR REMOVING DIRT AND CONSTRUCTION DEBRIS CAUSED BY CONSTRUCTION ACTIVITIES FROM THE ADJACENT ROADWAYS FOR THE DURATION OF THE PROJECT.

9. ALL POTENTIAL EROSION SHALL BE CONTROL IN SUCH MANNER SO AS TO PREVENT ANY DISPLACEMENT OF SILT TO THE ADJACENT PROPERTY OWNERS OR RIGTH-OF-WAY. THIS CONTROL SHALL BE IMPLEMENTED THROUGH PROPER INSTALLATION OF SILT FENCE DURING CONSTRUCTION AND MAINTAINED UNTIL PROPER GROUND COVER HAS BEEN ESTABLISHED.
IT IS THE CONTRACTOR'S RESPONSIBILITY TO PREVENT EROSION ONTO ADJACENT PROPERTY. ANY REMEDIAL MEASURES REQUIRED TO CORRECT DAMAGE CREATED BY EROSION SHALL BE AT THE CONTRACTOR'S EXPENSE.

10. THE EROSION CONTROL PLAN IS PREPARED AS GUIDE FOR INITIAL EROSION CONTROL MEASURES TO BE INSTALLED AT THE JOB SITE. IF EROSION OCCURS IN OTHER SPECIFIC AREAS OF THE PROPERTY DURING CONSTRUCTION, THE CONTRACTOR IS RESPONSIBLE FOR INSTALLING SILT FENCE, OR OTHER EROSION CONTROL MEASURES AS NEEDED TO PREVENT EROSION AND/OR CONTROL SEDIMENTATION.

11. CONTRACTOR IS SOLELY RESPONSIBLE FOR THE REMOVAL OF EROSION PREVENTION AND SEDIMENTATION CONTROL STRUCTURES AFTER CONSTRUCTION IS COMPLETE, BUT ONLY AFTER PROPER GROUND COVER HAS BEEN ESTABLISHED.

12. THE EROSION SEDIMENT CONTROL PLAN IS CONSIDERED A "LIVING DOCUMENT". THE SWPPP WILL BE REVISED FOR ANY OF THE FOLLOWING REASONS:

- WHEN THERE IS A CHANGE IN DESIGN, CONSTRUCTION, OPERATION, PROCEDURES, OR MAINTENANCE OF THE FACILITY THAT HAS A SIGNIFICANT EFFECT ON THE POTENTIAL TO CAUSE STORM WATER POLLUTION
- IF IT IS DISCOVERED THAT THE SWPPP FAILS TO PROTECT THE WATERS OF THE U.S. FROM POLLUTION
- IF AN EVALUATION OR INSPECTION RESULTS IN THE NEED FOR REVISION OF THE SWPPP

13. ANY ALTERATIONS OR REVISIONS TO THE BEST MANAGEMENT PRACTICES / EROSION CONTROL (BMP) PLAN BASED ON THE RESULTS OF THE INSPECTION SHALL BE IMPLEMENTED WITHIN SEVEN (7) DAYS. A REPORT SUMMARIZING THE SCOPE OF THE INSPECTION, NAMES AND QUALIFICATIONS OF PERSONNEL MAKING THE INSPECTION, THE DATE OF THE INSPECTION, MAJOR OBSERVATIONS RELATING TO THE IMPLEMENTATION OF THE BMP PLAN, AND ANY CORRECTIVE ACTIONS TAKEN SHALL BE MADE AND KEPT AS PART OF THE BMP PLAN FOR AT LEAST THREE (3) YEARS AFTER THE DATE OF INSPECTION, OR UNTIL ONE (1) YEAR AFTER COVERAGE UNDER THIS PERMIT ENDS. THE REPORT SHALL BE SIGNED IN ACCORDANCE WITH PART II OF THIS PERMIT.

14. A COPY OF THE APPROVED SWPPP, EROSION AND SEDIMENT CONTROL PLANS AND COPIES OF THE WEEKLY INSPECTION REPORT SHALL BE MAINTAINED ON THE SITE AT ALL TIMES IN THE JOB TRAILER.

15. PROVIDE SILT FENCE AND/OR OTHER CONTROL DEVICES, AS MAY BE REQUIRED, TO CONTROL SOIL EROSION DURING UTILITY CONSTRUCTION. ALL DISTURBED AREAS SHALL BE CLEANED, GRADED, AND STABILIZED WITH GRASSING IMMEDIATELY AFTER THE UTILITY INSTALLATION. FILL, COVER, AND TEMPORARY SEEDING AT THE END OF EACH DAY ARE RECOMMENDED. IF WATER IS ENCOUNTERED WHILE TRENCHING, THE WATER SHOULD BE FILTERED TO REMOVE ANY SEDIMENTS BEFORE BEING PUMPED BACK.

16. ALL EROSION CONTROL DEVICES SHALL BE PROPERLY MAINTAINED DURING ALL PHASES OF CONSTRUCTION UNTIL THE COMPLETION OF ALL CONSTRUCTION ACTIVITIES AND ALL DISTURBED AREAS HAVE BEEN STABILIZED. ADDITIONAL CONTROL DEVICES MAY BE REQUIRED DURING CONSTRUCTION IN ORDER TO CONTROL EROSION AND/OR OFFSITE SEDIMENTATION. ALL TEMPORARY CONTROL DEVICES SHALL BE REMOVED ONCE CONSTRUCTION IS COMPLETE AND THE SITE IS STABILIZED.

17. TEMPORARY DIVERSION BERMS AND/OR DITCHES SHALL BE PROVIDED AS NEEDED DURING CONSTRUCTION TO PROTECT WORK AREAS FROM UPSLOPE RUNOFF AND/OR TO DIVERT SEDIMENT-LADEN WATER TO APPROPRIATE TRAPS OR STABLE OUTLETS.

18. THE CONTRACTOR MUST TAKE NECESSARY ACTION TO MINIMIZE THE TRACKING OF MUD ONTO PAVED ROADWAY(S) FROM CONSTRUCTION AREAS AND THE GENERATION OF DUST. THE CONTRACTOR SHALL DAILY REMOVE MUD/SOIL FROM PAVEMENT, AS NEEDED BUT NOT LESS THAN DAILY.

19. LITTER, CONSTRUCTION DEBRIS, OILS, FUELS, AND BUILDING PRODUCTS WITH SIGNIFICANT POTENTIAL FOR IMPACT (SUCH AS STOCKPILES OF FRESHLY TREATED LUMBER) AND CONSTRUCTION CHEMICALS THAT COULD BE EXPOSED TO STORM WATER MUST BE PREVENTED FROM BECOMING A POLLUTANT SOURCE IN STORM WATER DISCHARGES.

20. CONTAMINATED MATERIALS:
ALL PAINT, SOLVENT, PETROLEUM PRODUCTS (FUEL, LUBE OILS, GREASE AND CUTTING OILS) AND PETROLEUM WASTE PRODUCTS SHALL BE STORED IN CONTAINERS (SUCH AS DRUMS, CANS, OR CARTONS) SO THAT THESE MATERIALS ARE NOT EXPOSED TO STORM WATER. SUFFICIENT PRACTICES OF SPILL PREVENTION CONTROL, AND/OR MANAGEMENT SHALL BE PROVIDED TO PREVENT ANY SPILLS OF THESE POLLUTANTS FROM ENTERING A WATER OF THE STATE. ANY CONTAINMENT SYSTEM USED TO IMPLEMENT THIS REQUIREMENTS SHALL BE CONSTRUCTED OF MATERIALS COMPATIBLE WITH THE SUBSTANCES CONTAINED AND ALSO PREVENT CONTAMINATION OF GROUNDWATER.

A. CHEMICAL MANAGEMENT:
DO NOT STORE CHEMICALS, DRUMS,AND BAGGED MATERIAL DIRECTLY ON THE GROUND. USE SECONDARY CONTAINMENT OR USE WOODEN PALLETS.
PROVIDE SPILL CONTAINMENT DIKES AROUND CHEMICAL AND FUEL STORAGE TANKS. LINE WITH PLASTIC FILM TO PREVENT SOIL CONTAMINATION.
STORE HAZARDOUS WASTES IN AN APPROPRIATE TYPE PF CONTAINER AND PROPERLY LABELED PER EPA, OSHA AND DOT REQUIREMENTS.

B. SOLID WASTE MANAGEMENT;
ONSITE TRASH SHOULD BE COLLECTED AND DISPOSED OF ON REGULAR BASIS. SANITARY SYSTEMS SHOULD BE REGULARLY SERVICED.
REPAIR TRASH CONTAINERS AND DUMPSTERS ON AS NEEDED BASIS. WHERE POSSIBLE PROVIDE COVER FOR WASTE CONTAINERS TO PREVENT THE ENTRY OF RAINWATER AND LOSS OF CONTENTS BY WIND.
MAINTAIN A CONTINGENCY PLAN IN THE CASE THAT HAZARDOUS OR TOXIC MATERIALS ARE DISCOVERED.

C. EQUIPMENT MAINTENANCE;
MAINTAIN WASTE FLUID CONTAINERS IN LEAK PROOF CONDITION.
VEHICLES AND EQUIPMENT SHOULD BE INSPECTED ON EACH DAY OF USE. LEAKS SHOULD BE REPAIRED IMMEDIATELY OR THE PROBLEM VEHICLE(S) OR EQUIPMENT SHOULD BE REMOVED FROM THE PROJECT SITE.

D. DESIGNATED WASH DOWN AREAS; (BY GENERAL CONTRACTOR)
PERFORM WASHOUT OF CONCRETE IN DESIGNATED AREAS ONLY. PLASTIC LINING MATERIAL SHOULD BE A MINIMUM OF 10 MIL POLYETHYLENE SHEETING AND SHOULD FREE OF HOLES, TEARS OR OTHER DEFECTS. HARDENED CONCRETE SHOULD BE BROKEN UP, REMOVED AND DISPOSED OF IN ACCORDANCE WITH SOLID WASTE MANAGEMENT.
MONITOR ON SITE CONCRETE WASTE STORAGE AND DISPOSAL PROCEDURE AT LEAST WEEKLY.

E. SPILL CONTAINMENT PLAN;
COMPLY WITH SUGGESTIONS AND REQUIREMENTS SET BY LOCAL FIRE DEPARTMENT. VERIFY WEEKLY THAT SPILL CONTROL CLEAN UP MATERIALS ARE LOCATED NEAR MATERIAL STORAGE, UNLOADING AND USE AREAS. RESTOCK APPROPRIATE CLEAN UP MATERIALS AFTER A SPILL INCIDENT HAS OCCURRED.

23. AFTER COMPLETION OF CONSTRUCTION, THE SITE CONTRACTOR SHALL PERFORM SITE CLEANUP TO REMOVE ALL TRASH, DEBRIS, EXCESS MATERIALS, EQUIPMENT, AND OTHER DELETERIOUS MATERIALS ASSOCIATED WITH CONSTRUCTION. THE SITE CONTRACTOR IS EXPRESSLY RESPONSIBLE FOR ENSURING THE SITE IS CLEAN AND IN OPERABLE CONDITION AT THE TIME OF FINAL ACCEPTANCE.

24. REMOVE TEMPORARY SEDIMENT CONTROL MEASURES WITHIN 30 DAYS AFTER FINAL STABILIZATION IS ACHIEVED AND TEMPORARY BEST MANAGEMENT PRACTICES (BMPS) ARE NO LONGER NEEDED.

25. ALL SLOPES 4:1 AND STEEPER THAN 4:1 SHALL REQUIRE EROSION CONTROL BLANKET S150-NORTH AMERICAN GREEN OR EQ. REFER TO MANUFACTURE SPECIFICATIONS FOR ADDITIONAL INFORMATION.

SEEDING AND SODDING NOTES:

1. ALL AREAS DISTURBED BY CONSTRUCTION WHICH ARE NOT BUILT UPON OR PLANTED IN SOME OTHER FASHION SHALL RECEIVE A MINIMUM OF 6" OF TOPSOIL AND BE SEEDED IN ACCORDANCE WITH THE SPECIFICATIONS EXCEPT WHERE PLANTINGS ARE INDICATED, SOD IS INDICATED, OR OTHERWISE SHOWN ON PLAN. THE CONTRACTOR SHALL SUPPLY NATURALLY OCCURRING, HIGH QUALITY

GRADING SITE LEGEND

REFER TO TOPOGRAPHIC SURVEY FOR EXISTING UTILITIES LEGEND
REFER TO SITE DEVELOPMENT PLANS FOR SITE LEGEND

SYMBOLS	DESCRIPTION
500	EXISTING CONTOUR MINOR
500	EXISTING CONTOUR MAJOR
500	PROPOSED CONTOUR MINOR
500	PROPOSED CONTOUR MAJOR
×979.5	EXISTING SPOT ELEVATION
979.55	PROPOSED SPOT ELEVATION (AT GUTTER LINE ADD 6" FOR TOP OF CURB ELEVATION)
979.55 FL	CHANNEL FLOW LINE ELEVATION
979.55 HP	PROPOSED SPOT ELEVATION HIGH POINT @ BREAKLINE
979.55 TC	PROPOSED SPOT ELEVATION TOP OF CURB/CONCRETE
979.55 GL	PROPOSED SPOT ELEVATION GUTTER LINE
979.55 CW	PROPOSED SPOT ELEVATION CONCRETE WALK
ME MATCH EXIST	EXISTING FIELD VERIFIED SPOT ELEVATION (AT GUTTER LINE ADD 6" FOR CURB ELEVATION)
979.55 FL	PROPOSED SPOT ELEVATION FLUSH AT GUTTER LINE
979.55 FF	PROPOSED FINISH FLOOR ELEVATION
979.55 CC	PROPOSED CURB CUT ELEVATION
979.55 TW	PROPOSED SPOT ELEVATION TOP OF WALL
979.55 BW	PROPOSED SPOT ELEVATION BOTTOM WALL AT GRADE
DI	DROP INLET SQUARE OR ROUND DI/SD4.0
SHW	STANDARD HEADWALL SHW/SD4.0
DS	NEW DOWNSPOUTS ARE SHOWN FOR REFERENCE ONLY REFER TO ARCHITECTURAL DRAWINGS FOR EXACT LOCATION PROVIDE BOOTS PER(DS/SD4.0)
ST	STORM SEWER ST/SD4.0
FD	4" DIA FOUNDATION DRAIN SMOOTH INTERIOR FD/SD4.0
	CAST IN PLACE SLOPPED HEADWALL HW/SD4.0
1.0 %	GRADE/SLOPE
	RUNOFF FLOW ARROW
	HANDICAPPED RAMP MAX SLOPE 8.33%
F.V.	FIELD VERIFY EXISTING CONDITIONS AND ADJUST ACCORDINGLY

GRADING AND DRAINAGE NOTES:

1. ALL EARTHWORK FOR THIS PROJECT SHALL BE UNCLASSIFIED EXCAVATION TO PLAN BOTTOM DEPTH. PLAN BOTTOM DEPTH IS DEFINED AS THE LOWEST ELEVATION OF EXCAVATION. THIS INCLUDES BOTTOM OF EXCAVATION FOR FOUNDATIONS, UTILITIES, ROADS, PARKING, SIDEWALKS, REQUIRED UNSUITABLE SOILS UNDERCUTTING AND/OR ROCK REMOVAL AS INDICATED OR NOTED ON DRAWINGS OR GEOTECHNICAL REPORT.

2. AREAS THAT WILL SUPPORT FOUNDATIONS, FLOORS, PAVEMENTS, SHALL BE PROPERLY PREPARED AS SPECIFIED IN ACCORDANCE WITH GEOTECHNICAL EXPLORATION REPORT PREPARED BY ECS SOUTHEAST, LLP DATED AUGUST 27 2019 AND SHALL BE APPROVED BY ON-SITE THE GEOTECHNICAL ENGINEER/TESTING AGENCY.

3. PRIOR TO CONSTRUCTION OR THE PLACEMENT OF NEW ENGINEERED FILL, THE EXPOSED SUBGRADE SHALL BE EVALUATED BY THE ON-SITE GEOTECHNICAL ENGINEER. THE EVALUATION SHALL INCLUDE PROOFROLLING OF THE EXPOSED SUBGRADE. IF UNSUITABLE MATERIALS AREA DISCOVERED, AN APPROPRIATE REMEDIAL MEASURE WOULD BE RECOMMENDED BY THE GEOTECHNICAL ENGINEER AT THAT TIME.

4. CARE MUST BE EXERCISED DURING GRADING AND FILL PLACEMENT OPERATIONS. THE COMBINATION OF CONSTRUCTION EQUIPMENT TRAFFIC AND EXCESS SURFACE MOISTURE CAN CAUSE PUMPING AND DETERIORATION OF THE NEAR SURFACE SOILS. THE SEVERITY OF THIS POTENTIAL PROBLEM DEPENDS TO A GREAT EXTENT ON THE WEATHER CONDITIONS PREVAILING DURING CONSTRUCTION. THE CONTRACTOR MUST EXERCISE DISCRETION WHEN SELECTING EQUIPMENT SIZES AND ALSO MAKE A CONCERTED EFFORT TO CONTROL SURFACE WATER WHILE THE SUBGRADE SOILS ARE EXPOSED. IF SUCH PROBLEMS DO ARISE, THE GEOTECHNICAL ENGINEER SHOULD BE CONTACTED TO EVALUATE THE CONDITION.

5. ENGINEERED FILL PLACEMENT AND COMPACTION OPERATIONS SHALL BE MONITORED BY THE GEOTECHNICAL ENGINEER OR HIS REPRESENTATIVE. FIELD DENSITY TESTS MUST BE PERFORMED ON EACH LIFT AS NECESSARY TO CHECK THAT THE SPECIFIED COMPACTION IS BEING ACHIEVED

6. THE CONTRACTOR SHALL VERIFY HORIZONTAL AND VERTICAL LOCATION OF ALL EXISTING STORM SEWER STRUCTURES, PIPES, AND ALL OTHER UTILITIES PRIOR TO CONSTRUCTION, AND SHALL CLOSELY MONITOR UTILITY INSTALLATION BY OTHERS. IT IS RECOMMENDED TO INSTALL GRAVITY STORM AND SANITARY LINES PRIOR TO ELECTRICAL, COMMUNICATION AND WATER LINES. BURY DEPTH CONFLICTS DUE TO NON COORDINATION WILL NOT SUBJECT TO CHANGE REQUEST.

7. EXCAVATION, ROCK REMOVAL, TOPSOIL STOCKPILES, DETENTION POND BERMS, UTILITY TRENCHES, AND OTHER ASPECTS OF CONSTRUCTION SHALL COMPLY WITH THE REQUIREMENTS OF THE OSHA REGULATIONS 1926.650-652.

8. THE CONTRACTOR SHALL IMMEDIATELY NOTIFY THE PROJECT CIVIL ENGINEER OF ANY DISCREPANCIES FOUND BETWEEN THESE PLANS AND FIELD CONDITIONS PRIOR TO CONSTRUCTION.

9. THE PRINCIPLES OF POSITIVE DRAINAGE SHALL BE APPLIED UNIVERSALLY ACROSS THE SITE. WATER SHALL BE MOVED AWAY FROM THE BUILDINGS. WATER SHOULD NOT BE ALLOWED TO POND AT LOW POINTS OR IN LOW AREAS. FINISH SUBGRADE TO REQUIRED ELEVATION WITHIN THE FOLLOWING TOLERANCES:

LAWN OR UNPAVED AREAS: PLUS OR MINUS 0.1FT.
SIDEWALKS: PLUS OR MINUS 0.1FT.
PAVEMENT: PLUS OR MINUS 0.05FT.
GRADING INSIDE BUILDING LINE TO A TOLERANCE OF 0.05 FT WHEN TESTED WITH A 10 FOOT STRAIGHTEDGE

10. AFTER COMPLETION OF CONSTRUCTION, THE CONTRACTOR SHALL PERFORM SITE CLEANUP TO REMOVE ALL TRASH, DEBRIS, EXCESS MATERIALS, EQUIPMENT, AND OTHER DELETERIOUS MATERIALS ASSOCIATED WITH CONSTRUCTION. THE SITE CONTRACTOR IS EXPRESSLY RESPONSIBLE FOR ENSURING THE SITE IS CLEAN AND IN OPERABLE CONDITION AT THE TIME OF FINAL ACCEPTANCE.

11. PROPOSED , EXISTING ROAD AND PARKING AREAS ARE NOT DESIGNED TO ACCOMMODATE HIGH LOADS CREATED BY CONSTRUCTION VEHICLES. CONTRACTOR SHALL MAINTAIN, STABILIZE AND REPAIR SUBGRADE/STONE BASE AND EXISTING ASPHALT PAVEMENT DAMAGED BY CONSTRUCTION TRAFFIC AS REQUIRED AT NO ADDITIONAL COST TO THE OWNER. CONTRACTOR IS RESPONSIBLE PROVIDE AND MAINTAIN TEMPORARY CONSTRUCTION ROAD IN ACCORDANCE WITH CONTRACTOR CONSTRUCTION METHOD AND SCHEDULE.

12. IF EXISTING FOUNDATION DRAINS EXIST AT EXISTING FOUNDATIONS. RECONNECT AND EXTEND EXISTING FOUNDATION DRAIN AS REQUIRED TO PROVIDE SUBSURFACE DRAINAGE.

13. ALL VALVE, METERS AND MANHOLE WITHIN DISTURBED LIMIT COVERS SHALL BE ADJUSTED TO MATCH THE NEW GRADES. (TYP)

ACCESSIBILITY INFORMATION:

1. THE ELEVATION OF ALL EXTERIOR WALKS AND SLABS SHALL BE FLUSH WITH FINISH FLOOR ELEVATION AT ALL DOORS, AND SHALL SLOPE NO MORE THAN 2% WITHIN 5' OF THOSE DOORS. ELSEWHERE EXTERIOR WALKS AND SLABS SHALL CONFORM TO THE SPOT ELEVATIONS AND CONTOURS INDICATED AND IN NO CASE SHALL EXCEED 5% SLOPE EXCEPT AT CURBS RAMPS WHICH SHALL SLOPE 8.33% (MAX.). CROSS SLOPE OF WALKING SURFACES SHALL NOT BE STEEPER THAN 2.0%.

2. GRATING LOCATED WITHIN ROUTE SHALL BE POSITIONED PERPENDICULAR TO DIRECTION OF THE TRAVEL. SLOT WIDTH SHALL NOT EXCEED 1/2" UNLESS OTHERWISE NOTED.

3. PARKING SPACES AND ACCESS AISLES SHALL BE LEVEL WITH SURFACES SLOPES NOT EXCEEDING 2.0% (1:50)

4. TRANSITIONS FROM RAMPS TO WALKS, SHALL BE FLUSH AND FREE OF ABRUPT CHANGES.

5. RAMPS TO BUILDING: WHERE INDICATED

a. MINIMUM WIDTH 48" SEE PLAN FOR ACTUAL DIMENSION.
b. SLOPE TO BE 1:12 MAXIMUM TO 1:20.
c. CROSS SLOPE 2% MAXIMUM.
d. FLARED SIDES: MAXIMUM SLOPE 1:10.

SITE UTILITIES NOTES: REFER TO M & E DRAWINGS FOR DEMOLITION AND INSTALLATION OF NEW UTILITIES..

1. CONTRACTOR SHALL CALL KENTUCKY 811 AT LEAST 2 BUSINESS DAYS PRIOR TO ANY EXCAVATION, TO LOCATE AND MARK EXISTING UTILITIES.

2. EXISTING UTILITY LINES SHOWN ARE APPROXIMATE LOCATIONS ONLY. THE CONTRACTOR SHALL FIELD VERIFY ALL EXISTING UTILITY LINE LOCATIONS PRIOR TO ANY CONSTRUCTION. ANY DEVIATIONS FROM THE DESIGN LOCATIONS SHALL BE REPORTED TO THE OWNER OR ENGINEER PRIOR TO BEGINNING CONSTRUCTION.

3. THE CONTRACTOR WILL PROVIDE ALL NECESSARY PROTECTIVE MEASURES TO SAFE GUARD UTILITIES FROM DAMAGE DURING CONSTRUCTION OF THIS PROJECT. IN THE EVENT THAT SPECIAL EQUIPMENT IS REQUIRED TO WORK OVER AND AROUND THE UTILITIES, THE SITE CONTRACTOR WILL BE REQUIRED TO FURNISH SUCH EQUIPMENT. IF SERVICE IS INTERRUPTED CONTRACTOR IS RESPONSIBLE FOR RESTORING SERVICE BY REPAIRING THE DAMAGED UTILITY AT NO ADDITIONAL COST TO THE OWNER.

4. THE CONTRACTOR SHALL NOTIFY EACH INDIVIDUAL UTILITY OWNER OF HIS PLAN OF OPERATION IN THE AREA OF THE UTILITIES PRIOR TO COMMENCING WORK, THE CONTRACTOR SHALL CONTACT THE UTILITY OWNERS AND REQUEST THEM TO PROPERLY LOCATE THEIR UTILITY ON THE GROUND. THIS NOTIFICATION SHALL BE GIVEN AT LEAST (3) BUSINESS DAYS PRIOR TO COMMENCEMENT OF OPERATIONS AROUND THE UTILITY.

FIELD QUALITY CONTROL:

OWNER WILL ENGAGE A QUALIFIED TESTING AGENCY TO PERFORM THE SPECIAL INSPECTION AND QUALITY ASSURANCE TESTING AS REQUIRED IN ACCORDANCE WITH THE LATEST EDITION OF KENTUCKY BUILDING CODE CHAPTER 17 AND EARTHWORK SPECIFICATION. CONTRACTOR IS RESPONSIBLE FOR QUALITY CONTROL SCHEDULING, PLANNING AND INSPECTION TO ENSURE PROPER TESTING BY OWNER'S TESTING AGENCY IN ACCORDANCE WITH GEOTECHNICAL RECOMMENDATIONS AND EARTHWORK SPECIFICATION.

SCALE: 1" = 30'-0"
SCALE IN FEET
0 15 30 90

SHERMAN CARTER BARNHART ARCHITECTS

FINAL DOCUMENTS

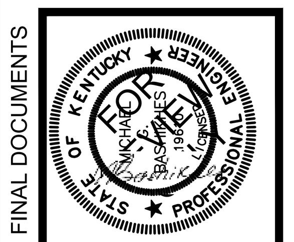

NEW SPENCER COUNTY BUS GARAGE

TAYLORSVILLE, KENTUCKY

SITE GRADING, DRAINAGE AND EROSION SEDIMENT CONTROL PLAN

JOB NO.	1745
DATE	12/16/2019
DRAWN	MB
CHECKED	BKL

COPYRIGHT © 2019 SHERMAN CARTER BARNHART ARCHITECTS, PLLC

REVISIONS

No.	Description	Date

SHEET

SD2.0

X:\Projects\2017\1745\SITE\1745_SD2X.dwg
Day & Time: Dec 12, 2019 - 4:52pm
Login Name: kpalmer
Sheet Layout: SD2.0

DIM.	
A	7"
B	4"

SHERMAN CARTER BARNHART ARCHITECTS

NEW SPENCER COUNTY BUS GARAGE

TAYLORSVILLE, KENTUCKY

SITE DETAILS

JOB NO.	1745
DATE	12/16/2019
DRAWN	KRP
CHECKED	BKL

COPYRIGHT © 2019 SHERMAN CARTER BARNHART ARCHITECTS, PLLC

REVISIONS

No.	Description	Date

SHEET

SD3.0

X:\Projects\2017\1745\SITE\1745-SD3X.dwg
Day & Time: Dec 12, 2019 - 4:52pm
Layout Name: Jackson
Sheet Layout: SD3.0

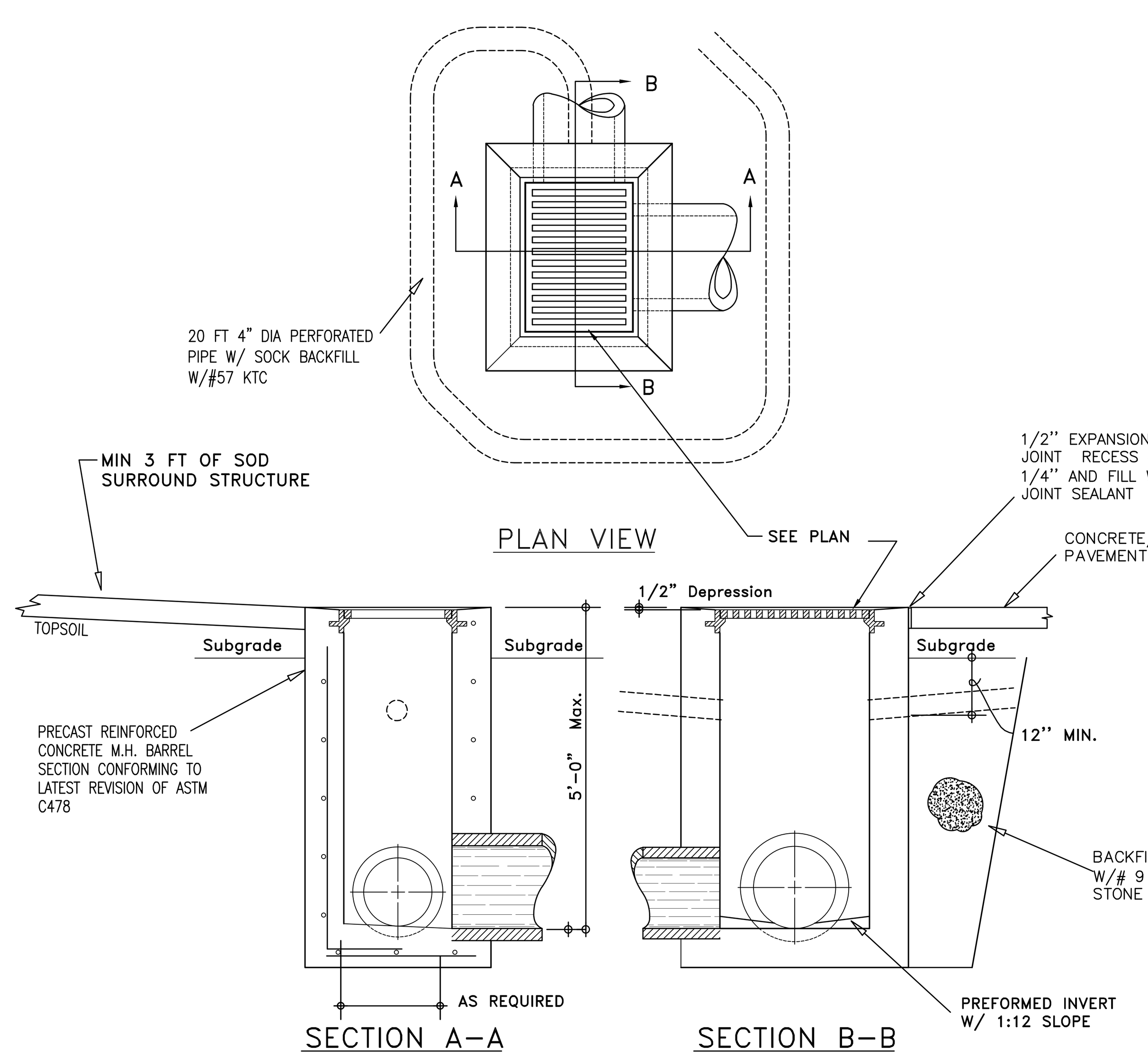

AT LAWN AND PAVEMENT AREAS

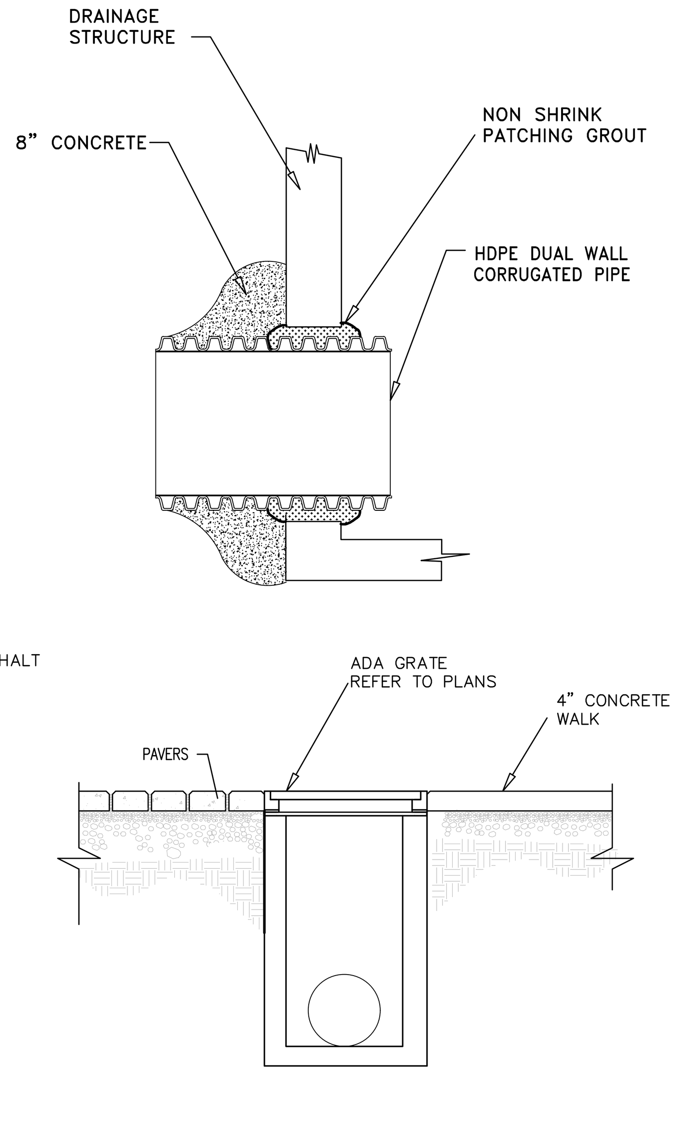

AT SIDEWALK AREAS

DROP INLET — DI

N.T.S. DIMENSIONS AND REINFORCEMENT DESIGN BY PRECAST MANUFACTURER

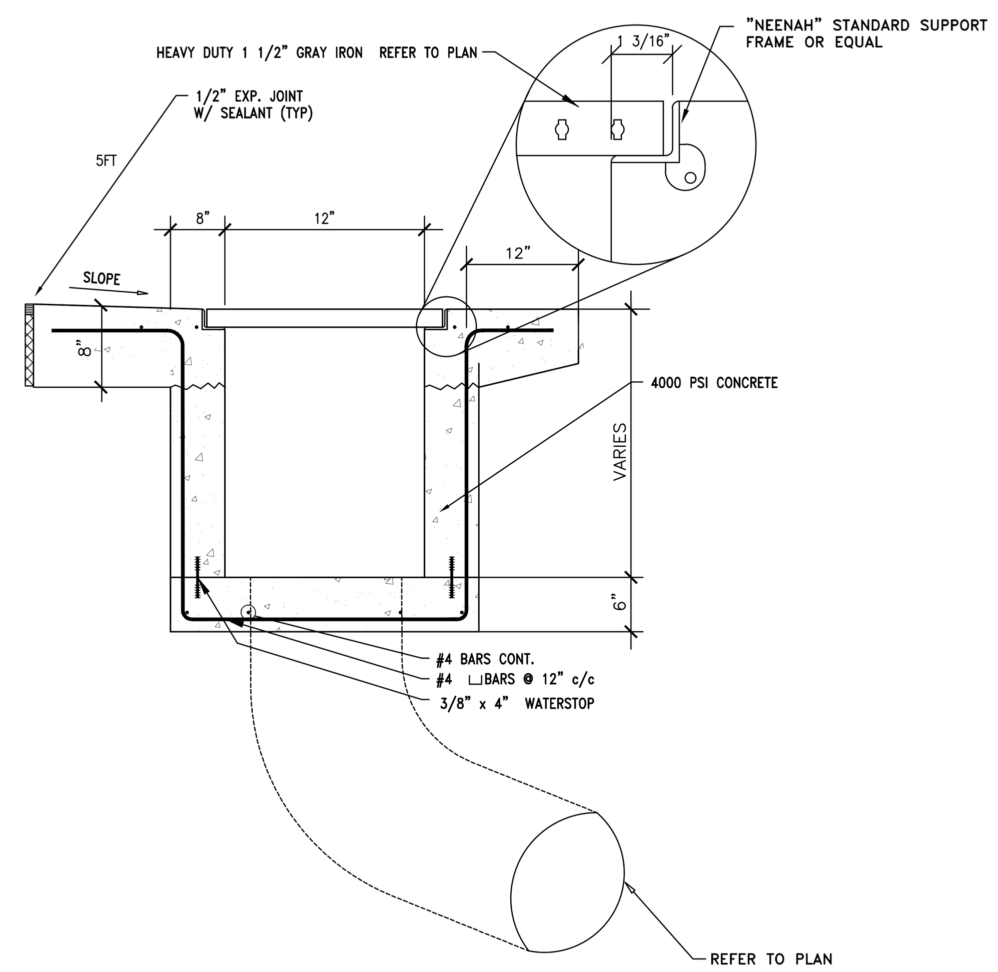

TRENCH DRAIN — TR

N.T.S.

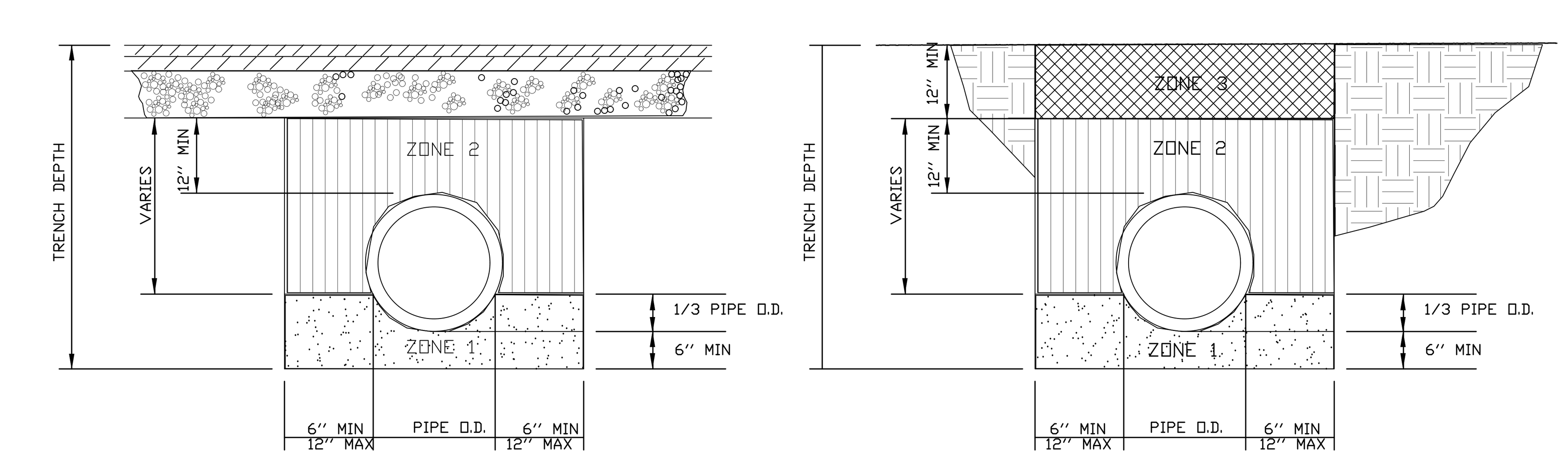

STORM SEWER TRENCH IN PAVED AREAS

ZONE 2 – COMPACTED KTC NO. 9 STONE (FOR PIPING UNDER AND WITHIN 3' OF PAVED AREAS.)

ZONE 1 – PIPE BEDDING MATERIAL, KTC NO. 9 STONE

STORM SEWER TRENCH IN NON-PAVED AREAS

ZONE 3 – COMPACTED SOIL BACKFILL (COMPACT SOIL IN 6'' LIFTS)

ZONE 2 – COMPACTED SELECT MATERIAL KTC #9 OR EQ.

ZONE 1 – PIPE BEDDING MATERIAL, KTC NO. 9 STONE

FOR EXTERIOR STORM PIPING ONLY UNO

PIPE BEDDING DETAILS — ST

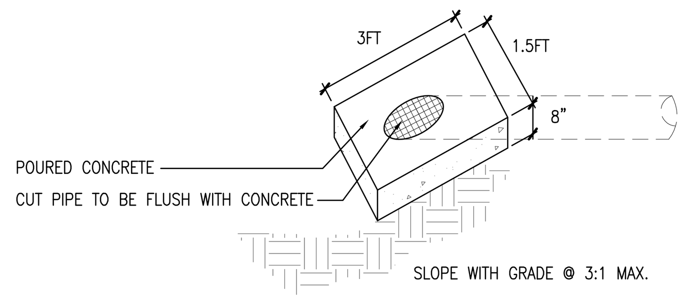

CAST IN PLACE HEADWALL — HW

N.T.S.

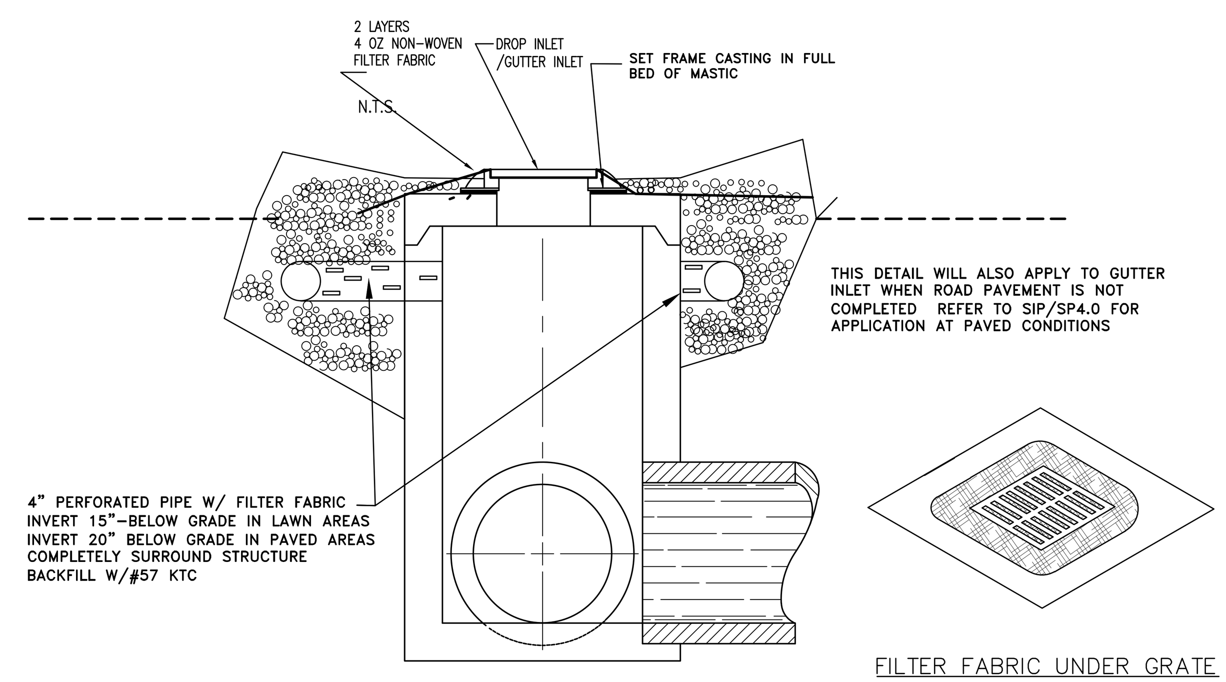

FILTER FABRIC INLET PROTECTION

USE FILTER FABRIC THAT CONFORMS TO DOT STANDARD SPECIFICATIONS FOR HIGHWAY CONSTRUCTION (LATEST EDITION).

INSTALLATION:

EXCAVATE A TRENCH 6-INCHES WIDE AND 6-INCHES DEEP AROUND THE OUTSIDE PERIMETER OF THE INLET UNLESS THE FABRIC IS PNEUMATICALLY INSTALLED.

INSTALL THE FILTER FABRIC TO A MINIMUM HEIGHT OF 24-INCHES ABOVE GRADE. SPACE THE POSTS AROUND THE PERIMETER OF THE INLET A MAXIMUM OF 3-FEET APART AND DRIVE THEM INTO THE GROUND A MINIMUM OF 24-INCHES.

CUT THE FILTER FABRIC FROM A CONTINUOUS ROLL TO THE LENGTH OF THE PROTECTED AREA TO AVOID THE USE OF JOINTS. WHEN JOINTS ARE NECESSARY, WRAP FILTER FABRIC TOGETHER ONLY AT A SUPPORT POST WITH BOTH ENDS SECURELY FASTENED TO THE POST, WITH A MINIMUM 6-INCH OVERLAP.

EXTEND THE FILTER FABRIC A MINIMUM OF 12-INCHES INTO THE TRENCH. BACKFILL THE TRENCH WITH SOIL OR CRUSHED STONE AND COMPACT OVER THE FILTER FABRIC UNLESS THE FABRIC IS PNEUMATICALLY INSTALLED.

ATTACH FABRIC TO STEEL POSTS WITH HEAVY-DUTY PLASTIC TIES. ATTACH AT LEAST FOUR (4) EVENLY SPACED TIES IN A MANNER TO PREVENT SAGGING OR TEARING OF THE FABRIC. IN ALL CASES, AFFIX TIES IN NO LESS THAN FOUR (4) PLACES.

INSPECTION AND MAINTENANCE:

INSPECTIONS SHOULD BE MADE EVERY 7 CALENDAR DAYS AND WITHIN 24-HOURS AFTER EACH STORM THAT PRODUCES ½-INCHES OR MORE OF RAIN. IF THE FABRIC BECOMES CLOGGED, IT SHOULD BE REPLACED. SEDIMENT SHOULD BE REMOVED WHEN IT REACHES APPROXIMATELY 1/3 THE HEIGHT OF THE FENCE.

TAKE CARE NOT TO DAMAGE OR UNDERCUT FABRIC WHEN REMOVING SEDIMENT. IF A SUMP IS USED, SEDIMENT SHOULD BE REMOVED WHEN IT FILLS APPROXIMATELY 1/3 THE DEPTH OF THE HOLE.MAINTAIN THE POOL AREA, ALWAYS PROVIDING ADEQUATE SEDIMENT STORAGE VOLUME FOR THE NEXT STORM.

STORM DRAIN INLET PROTECTION STRUCTURES SHOULD BE REMOVED ONLY AFTER THE DISTURBED AREAS ARE PERMANENTLY STABILIZED. REMOVE ALL CONSTRUCTION MATERIAL AND SEDIMENT, AND DISPOSE OF THEM PROPERLY. GRADE THE DISTURBED AREA TO THE ELEVATION OF THE DROP INLET STRUCTURE CREST. USE APPROPRIATE PERMANENT STABILIZATION METHODS TO STABILIZE BARE AREAS AROUND THE INLET.

FABRIC INLET PROTECTION — FIP

N.T.S.

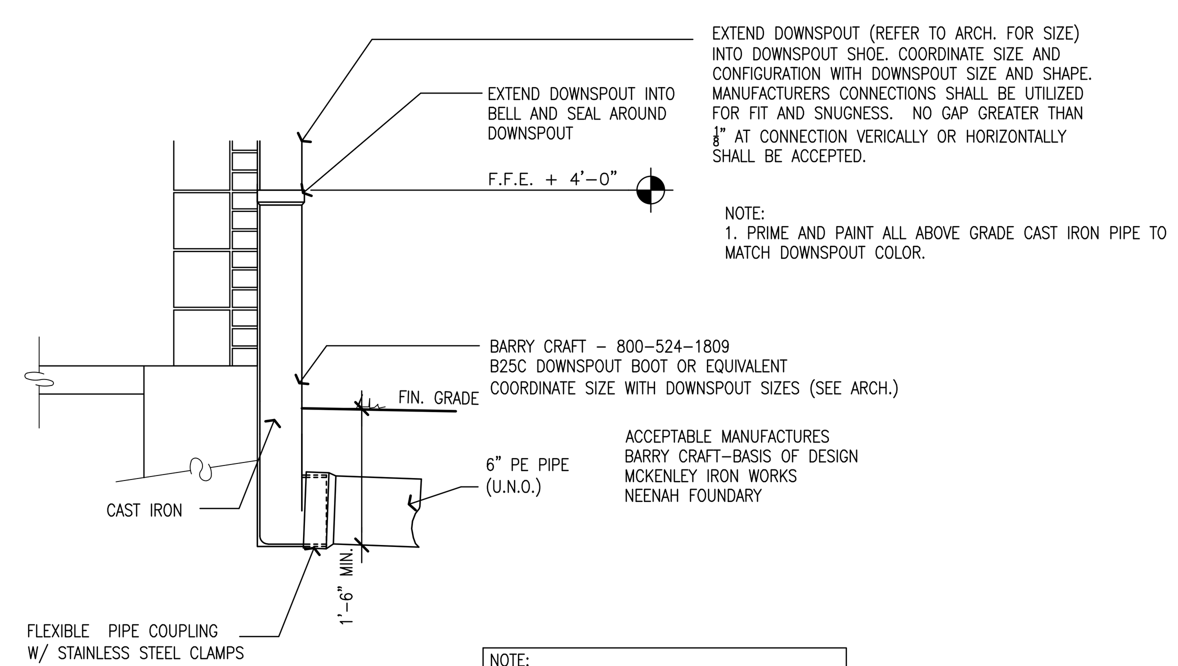

EXTEND DOWNSPOUT (REFER TO ARCH. FOR SIZE) INTO DOWNSPOUT SHOE. COORDINATE SIZE AND CONFIGURATION WITH DOWNSPOUT SIZE AND SHAPE. MANUFACTURERS CONNECTIONS SHALL BE UTILIZED FOR FIT AND SNUGNESS. NO GAP GREATER THAN ⅛" AT CONNECTION VERICALLY OR HORIZONTALLY SHALL BE ACCEPTED.

NOTE:
1. PRIME AND PAINT ALL ABOVE GRADE CAST IRON PIPE TO MATCH DOWNSPOUT COLOR.

ACCEPTABLE MANUFACTURES
BARRY CRAFT-BASIS OF DESIGN
MCKENLEY IRON WORKS
NEENAH FOUNDARY

NOTE:
CONTRACTOR SHALL COORDINATE LOCATIONS OF BOOTS TO MATCH EXACTLY WITH DOWNSPOUT LOCATIONS INDICATED ON ARCH. DWGS.

DOWNSPOUT CONNECTION — DS

N.T.S.

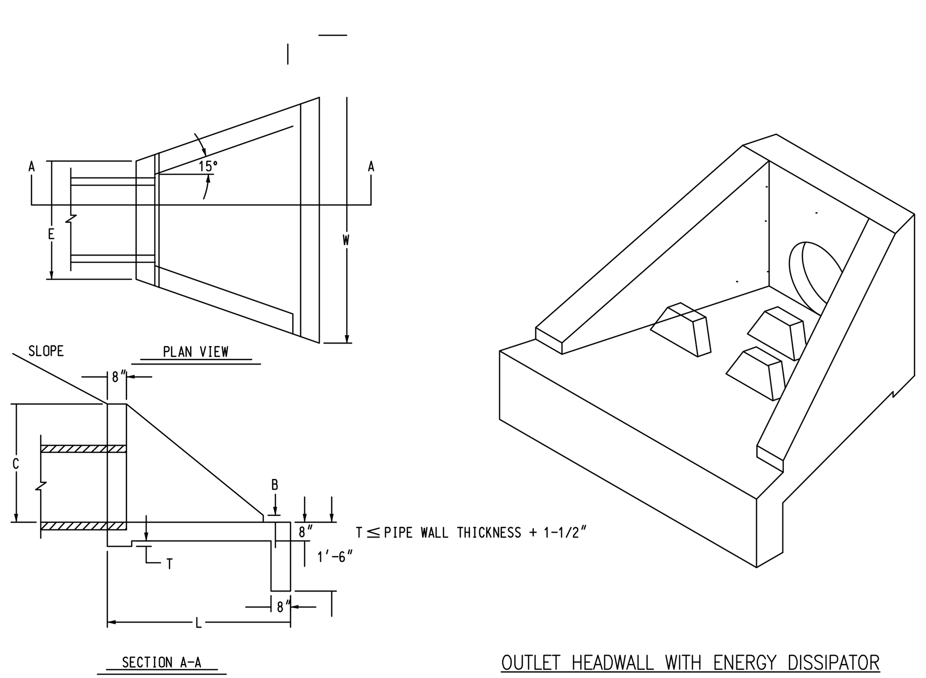

DIMENSIONS						
PIPE DIA.	C	L	W	E	B	WEIGHT
12" & 15"	2'- 0"	4'- 0"	4'- 9"	2'- 9"	0'- 3"	3,040 LBS
18" & 24"	2'- 9"	5'- 6"	6'- 6"	3'- 6"	0'- 3"	5,470 LBS
30" & 36"	4'- 4"	5'- 0"	8'- 8"	3'- 8"	1'- 6"	8,700 LBS

STANDARD HEADWALL(15"–30") — SHW

N.T.S. DIMENSIONS AND REINFORCEMENT DESIGN BY PRECAST MANUFACTURER

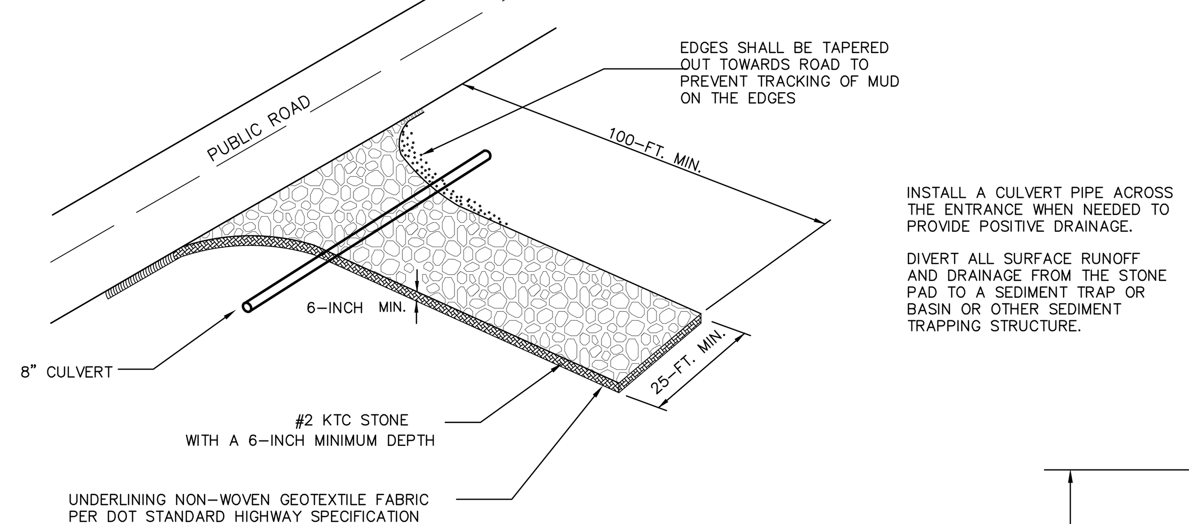

INSTALL A CULVERT PIPE ACROSS THE ENTRANCE WHEN NEEDED TO PROVIDE POSITIVE DRAINAGE.

DIVERT ALL SURFACE RUNOFF AND DRAINAGE FROM THE STONE PAD TO A SEDIMENT TRAP OR BASIN OR OTHER SEDIMENT TRAPPING STRUCTURE.

STABILIZED CONSTRUCTION ENTRANCE

WHEN AND WHERE TO USE IT

STABILIZED CONSTRUCTION ENTRANCES SHOULD BE USED AT ALL POINTS WHERE TRAFFIC WILL BE LEAVING A CONSTRUCTION SITE AND MOVING DIRECTLY ONTO A PUBLIC ROAD.

IMPORTANT CONSIDERATIONS

IF WASHING IS USED, PROVISIONS MUST BE MADE TO INTERCEPT THE WASH WATER AND TRAP THE SEDIMENT BEFORE IT IS CARRIED OFFSITE. WASHDOWN FACILITIES SHALL BE REQUIRED AS DIRECTED BY INSPECTOR AS NEEDED. WASHDOWN AREAS IN GENERAL MUST BE ESTABLISHED WITH CRUSHED GRAVEL AND DRAIN INTO A SEDIMENT TRAP OR SEDIMENT BASIN. CONSTRUCTION ENTRANCES SHOULD BE USED IN CONJUNCTION WITH THE STABILIZATION OF CONSTRUCTION ROADS TO REDUCE THE AMOUNT OF MUD PICKED UP BY VEHICLES.

UINSTALLATION:

REMOVE ALL VEGETATION AND ANY OBJECTIONABLE MATERIAL FROM THE FOUNDATION AREA.

DIVERT ALL SURFACE RUNOFF AND DRAINAGE FROM STONES TO A SEDIMENT TRAP OR BASIN.

INSTALL A NON-WOVEN GEOTEXTILE FABRIC PRIOR TO PLACING ANY STONE. INSTALL A CULVERT PIPE ACROSS THE ENTRANCE WHEN NEEDED TO PROVIDE POSITIVE DRAINAGE.

THE ENTRANCE SHALL CONSIST OF #2 KTC STONE PLACED AT A MINIMUM DEPTH OF 6-INCHES. MINIMUM DIMENSIONS OF THE ENTRANCE SHALL BE 24-FEET WIDE BY 100-FEET LONG, AND MAY BE MODIFIED AS NECESSARY TO ACCOMMODATE SITE CONSTRAINTS.

THE EDGES OF THE ENTRANCE SHALL BE TAPERED OUT TOWARDS THE ROAD TO PREVENT TRACKING OF MUD AT THE EDGE OF THE ENTRANCE.

INSPECTION AND MAINTENANCE:

INSPECT CONSTRUCTION ENTRANCES EVERY SEVEN (7) CALENDAR DAYS AND WITHIN 24-HOURS AFTER EACH RAINFALL EVENT THAT PRODUCES ½-INCHES OR MORE OF PRECIPITATION, OR AFTER HEAVY USE. CHECK FOR MUD AND SEDIMENT BUILDUP AND PAD INTEGRITY. MAKE DAILY INSPECTIONS DURING PERIODS OF WET WEATHER. MAINTENANCE IS REQUIRED MORE FREQUENTLY IN WET WEATHER CONDITIONS. RESHAPE THE STONE PAD AS NEEDED FOR DRAINAGE AND RUNOFF CONTROL.

WASH OR REPLACE STONES AS NEEDED AND AS DIRECTED BY THE INSPECTOR. THE STONE IN THE ENTRANCE SHOULD BE WASHED OR REPLACED WHENEVER THE ENTRANCE FAILS TO REDUCE MUD BEING CARRIED OFF-SITE BY VEHICLES. FREQUENT WASHING WILL EXTEND THE USEFUL LIFE OF STONE.

IMMEDIATELY REMOVE MUD AND SEDIMENT TRACKED OR WASHED ONTO PUBLIC ROADS BY BRUSHING OR SWEEPING. FLUSHING SHOULD ONLY BE USED WHEN THE WATER CAN BE DISCHARGED TO A SEDIMENT TRAP OR BASIN.

REPAIR ANY BROKEN PAVEMENT IMMEDIATELY.

CONSTRUCTION ENTRANCE — CE

N.T.S.

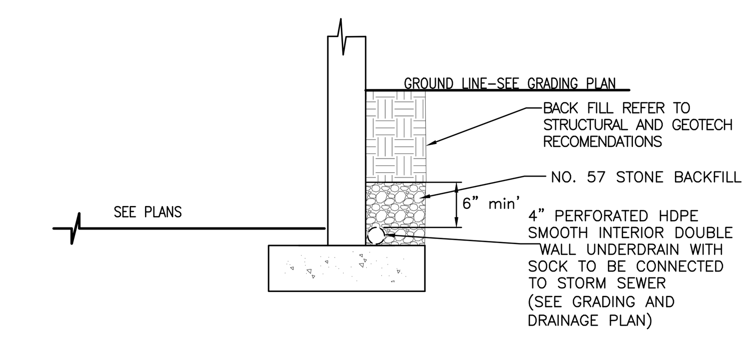

FOUNDATION DRAIN DETAIL — FD

N.T.S.

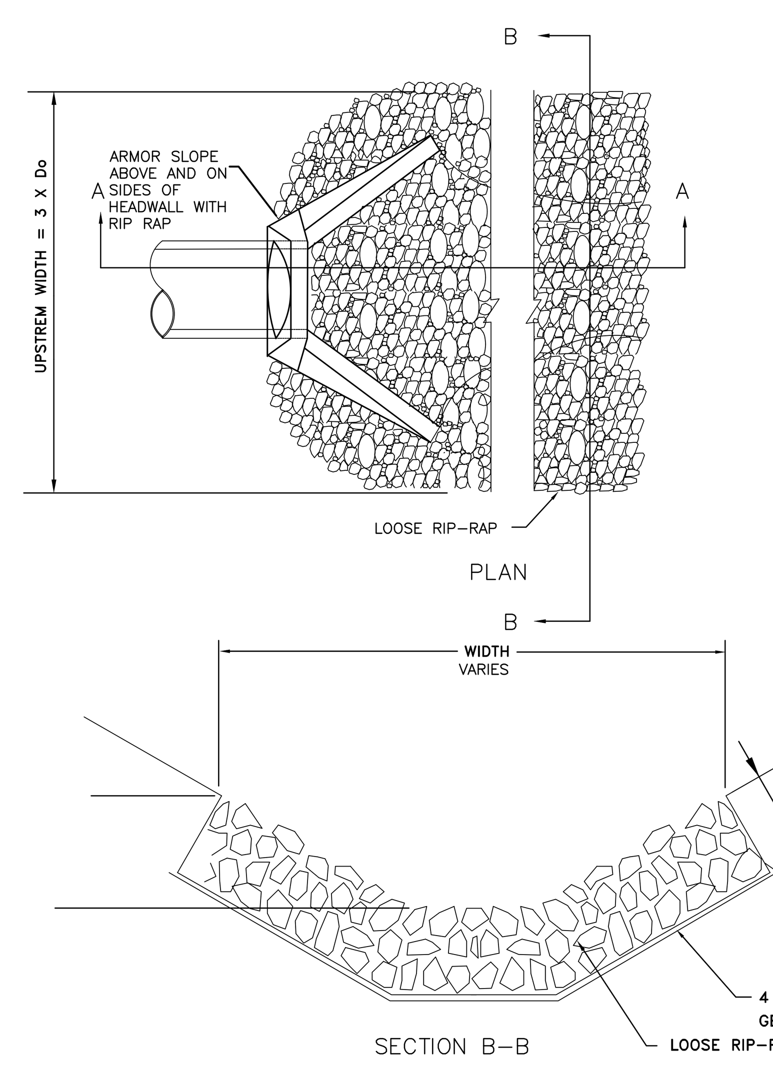

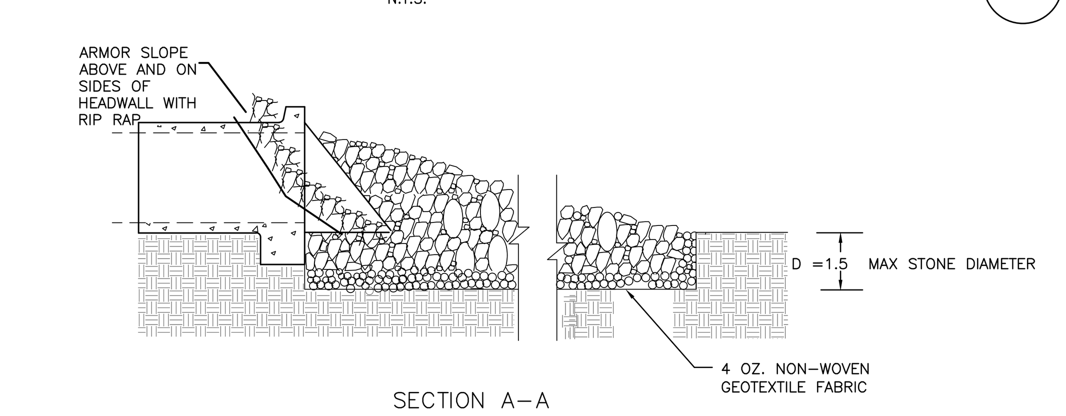

INSTALLATION
RIPRAP PLACEMENT SHOULD BE COMPLETED WITHIN A SHORT TIME PERIOD (LESS THAN A WEEK) TO MINIMIZE POTENTIAL DAMAGE RESULTING FROM STORMWATER RUNOFF.

WHEN USED AS SLOPE PROTECTION, RIP RAP SHOULD BE KEYED INTO THE SLOPE TOE BY AT LEAST THE GREATER OF 6 INCHES OR ONE HALF RIPRAP DIAMETER.

RIPRAP SHOULD NOT BE PLACED UNTIL FINAL SUBGRADE ELEVATION HAS BEEN ACHIEVED

GEOTEXTILE SHOULD BE INSTALLED TO MAINTAIN SEPARATION 0 FROCK MATERIAL FROM THE UNDERLYING SOIL. GEOTEXTILE SHOULD NOT BE SKETCHED OR OTHERWISE COMPROMISED. SECURE FABRIC WITH ANCHOR TRENCHES, STAKES, STAPLES OR ANY OTHER METHOD RECOMMENDED BY THE MANUFACTURER.

RUBBLE-STONE RIPRAP (PLAIN)

RUBBLE-STONE RIPRAP SHOULD CONSIST OF AT LEAST 90% OF THE STONE NOT LESS THAN 8 INCHES WIDE BY 12 INCHES LONG BY 12 INCHES DEEP AND SHOULD BE APPROXIMATELY RECTANGULAR IN SHAPE. RUBBLE-STONE SHOULD BE HAND PLACED SO THAT THE STONES ARE CLOSE TOGETHER, ARE STAGGERED AT ALL JOINTS AS FAR AS POSSIBLE, AND ARE PLACED SO AS TO REDUCE THE VOIDS TO A MINIMUM. THE MAIN STONE SHOULD BE THOROUGHLY "CHINKED" OR ANCHORED IN PLACE WITH
1 IN. TO 3-IN. STONES BY THROWING THEM OVER THE SURFACE IN ANY MANNER THAT IS PRACTICAL FOR THE SMALLER STONES TO FILL THE VOIDS.

THE STANDARD DEPTH SHOULD BE 24 INCHES. THE AVERAGE DEPTH SHOULD NOT BE LESS THAN CHANNEL LINING SHALL BE ESTIMATED ON THE BASIS OF 1.00 TON PER SQ

WHEN RUBBLE-STONE RIP-RAP IS CONSTRUCTED IN LAYERS, THE LAYERS SHOULD BE THOROUGHLY TIED TOGETHER WITH LARGE STONES PROTRUDING FROM ONE LAYER INTO THE OTHER.

CULVERT RIPRAP OUTLET PROTECTION — OP

N.T.S.

SHERMAN CARTER BARNHART ARCHITECTS

FINAL DOCUMENTS

STATE OF KENTUCKY ★ PROFESSIONAL ENGINEER ★

NEW SPENCER COUNTY BUS GARAGE
TAYLORSVILLE, KENTUCKY

SITE DETAILS

JOB NO.	1745
DATE	12/16/2019
DRAWN	
CHECKED	BKL

COPYRIGHT © 2019 SHERMAN CARTER BARNHART ARCHITECTS, PLLC

REVISIONS

No.	Description	Date

SHEET
DS4.0

X:\Projects\2017\1745\SITE\1745_SD4X.dwg
Day & Time: Dec 12, 2019 - 4:52pm
Login Name: kpalmer
Sheet Layout: SD40

1. GENERAL:

A. THESE GENERAL NOTES PRESENT AND / OR SUMMARIZE KEY PROJECT INFORMATION FOR THE PLAN READER's CONVENIENCE. SEE ALSO INDIVIDUAL SHEET NOTES AND PROJECT SPECIFICATIONS FOR ADDITIONAL INFORMATION AND REQUIREMENTS.

B. ALL REFERENCES TO CODES AND STANDARDS CONTAINED WITHIN THE CONTRACT DOCUMENTS ARE TO THE MOST RECENT ISSUE IN EFFECT AS OF THE DATE OF THESE DOCUMENTS UNLESS NOTED OTHERWISE IN THE PROJECT SPECIFICATIONS OR ON THE PLANS.

C. THESE DRAWINGS REPRESENT STRUCTURAL COMPONENTS OF THIS BUILDING IN THEIR FINAL AND COMPLETED STATE. CONSTRUCTION PROCEDURES, METHODS and MEANS (INCLUDING, BUT NOT LIMITED TO, TEMPORARY SHORING AND BRACING), SAFETY PRECAUTIONS AND / OR MECHANICAL REQUIREMENTS TO ERECT THE ELEMENTS OF THIS BUILDING ARE THE SOLE RESPONSIBILITY OF THE CONTRACTOR AND / OR SUB-CONTRACTORS DOING THE WORK. THE CONTRACTOR HAS SOLE RESPONSIBILITY FOR COMPLYING WITH OSHA REGULATIONS.

D. UNDERGROUND UTILITIES MAY BE PRESENT WITHIN THE FOOTPRINT OF THIS BUILDING. IT IS THE SOLE RESPONSIBILITY OF THE CONTRACTOR TO IDENTIFY, LOCATE, AND PROTECT ALL EXISTING UNDERGROUND UTILITIES FROM DAMAGE DURING CONSTRUCTION. ADDITIONALLY, THE CONTRACTOR IS RESPONSIBLE TO PROTECT ANY EXISTING FACILITIES FROM DAMAGE DURING CONSTRUCTION. ANY DAMAGE DONE TO THE EXISTING FACILITIES OR EXISTING UNDERGROUND UTILITIES DURING CONSTRUCTION SHALL BE REPAIRED TO THE SATISFACTION OF THE OWNER, AT NO ADDITIONAL COST.

E. THE USE OF REPRODUCTIONS OF THE STRUCTURAL DRAWINGS BY THE CONTRACTOR OR ANY SUB-CONTRACTOR, DETAILER, FABRICATOR, ERECTOR, MATERIAL SUPPLIER, ET. AL. IN LIEU OF OR TO FACILITATE THE PREPARATION OF SHOP OR ERECTION DRAWINGS WILL NOT BE PERMITTED. ELECTRONIC DRAWING FILES WILL NOT BE PROVIDED TO THE CONTRACTOR.

F. THE CONTRACTOR SHALL COORDINATE THE STRUCTURAL DRAWINGS WITH THE ARCHITECTURAL, MECHANICAL, ELECTRICAL, PLUMBING, AND CIVIL DRAWINGS. NOTIFY THE ARCHITECT IMMEDIATELY IF ANY DISCREPANCIES, CONFLICTING INFORMATION AND / OR OMISSIONS ARE DISCOVERED. THE CONTRACTOR SHALL AWAIT CLARIFICATION / RESOLUTION OF SUCH CONFLICTS PRIOR TO PROCEEDING WITH CONSTRUCTION.

G. THE CONTRACTOR SHALL VERIFY EXISTING DIMENSIONS, ELEVATIONS AND SITE CONDITIONS BEFORE STARTING WORK. NOTIFY THE ARCHITECT IMMEDIATELY ANY DISCREPANCIES, CONFLICTING INFORMATION AND / OR OMISSIONS ARE DISCOVERED. THE CONTRACTOR SHALL AWAIT CLARIFICATION / RESOLUTION OF SUCH CONFLICTS PRIOR TO PROCEEDING WITH CONSTRUCTION.

H. THE CONTRACTOR SHALL CHECK AND APPROVE ALL SHOP DRAWINGS AND MATERIAL SUBMITTALS PRIOR TO SUBMITTING SAME TO THE ARCHITECT FOR REVIEW. FAILURE TO COMPLETELY CHECK THE SHOP DRAWINGS DOES NOT RELIEVE THE CONTRACTOR OF RESPONSIBILITY FOR PROBLEMS THAT MAY ARISE FROM COORDINATION, DETAILING, FABRICATION, AND / OR ERECTION ERRORS. DELAYS IN THE PROJECT RESULTING FROM THE REJECTION OF INCOMPLETE OR INADEQUATE SUBMITTALS SHALL BE THE SOLE RESPONSIBILITY OF THE CONTRACTOR.

J. THE CONTRACTOR SHALL COORDINATE THE SUPPORT REQUIREMENTS FOR MECHANICAL EQUIPMENT, PARTITIONS, AND OTHER SUCH ITEMS AND VERIFY THAT THE MISCELLANEOUS FRAMING SHOWN ON STRUCTURAL DRAWINGS TO SUPPORT THOSE ITEMS IS CONSISTENT WITH THE MANUFACTURER's REQUIREMENTS.

K. PROPRIETARY PRODUCTS OF INDIVIDUAL MANUFACTURERS AND / OR TRADEMARKED PRODUCTS ARE SPECIFIED HEREIN ON AN "OR APPROVED EQUAL" BASIS. SUBJECT TO THE SUBSTITUTION PROVISIONS OUTLINED IN THE SPECIFICATIONS , MANUFACTURER's DATA ON ALTERNATE PRODUCTS OF A QUALITY EQUAL TO OR BETTER THAN THOSE SPECIFIED MAY BE SUBMITTED TO THE ARCHITECT FOR REVIEW AND APPROVAL. UPON APPROVAL OF ARCHITECT, THESE ALTERNATE PRODUCTS MAY BE USED IN LIEU OF THE SPECIFIED PRODUCT.

L. ABBREVIATIONS:

"ACI"........ REFERS TO THE "AMERICAN CONCRETE INSTITUTE"
"AISC"........ REFERS TO THE "AMERICAN INSTITUTE OF STEEL CONSTRUCTION"
"SJI"........ REFERS TO THE "STEEL JOIST INSTITUTE"
"SDI"........ REFERS TO THE "STEEL DECK INSTITUTE"
"ASTM"........ REFERS TO THE "AMERICAN SOCIETY FOR TESTING AND MATERIALS"
"AWS"........ REFERS TO THE "AMERICAN WELDING SOCIETY"
"V.I.F."........ DENOTES A DIMENSION OR CONDITION THAT MUST BE "VERIFIED IN THE FIELD"

"U.N.O."........ MEANS "UNLESS NOTED OTHERWISE"
"T.U.N."........ MEANS "TYPICAL UNLESS NOTED" OTHERWISE
"TYP."........ THIS NOTATION ON SECTIONS, DIMENSIONS AND DETAILS INDICATES THAT THE IDENTIFIED CONTITION IS "TYPICAL" AT SEVERAL LOCATIONS.

"SIM."........ THIS NOTATION ON SECTIONS AND DETAILS INDICATES THAT THE IDENTIFIED CONDITION IS "SIMILAR" TO THE REFERENCED SECTION OR DETAIL.

"N.S. & F.S."........ MEANS "NEAR SIDE AND FAR SIDE"
"E.W."........ MEANS "EACH WAY"
"EL." or "ELEV."........ MEANS "ELEVATION"
"T.O.S. ELEV."........ or "T/STL. ELEV." DENOTES "TOP OF STEEL ELEVATION"

"T/SLAB"........ DENOTES "TOP OF SLAB"
"T/C ELEV."........ or "T/CONC. ELEV." DENOTES "TOP OF CONCRETE ELEVATION"

"B/FTG. ELEV."........ DENOTES "BOTTOM OF FOOTING ELEVATION"
"SEE ARCH."........ DENOTES A DIMENSION OR CONDITION THAT IS CLARIFIED ON THE ARCHITECTURAL DRAWINGS

"CTRS." or "c/c"........ DENOTES A "CENTER TO CENTER DIMENSION"
"C.J."........ DENOTES A "CONTROL JOINT" OR A "CONSTRUCTION JOINT" IN THE CONCRETE SLAB OR FOUNDATION WALLS – SEE SECTIONS AND DETAILS ON SHEET S2.0 FOR ADDITIONAL INFORMATION

"R.C.J."........ DENOTES A "REQUIRED CONSTRUCTION JOINT"
"WWF"........ DENOTES "WELDED WIRE FABRIC" CONCRETE SLAB REINFORCING
"WWR"........ DENOTES "WELDED WIRE REINFORCEMENT" CONCRETE SLAB REINFORCING
"TCX"........ DENOTES A STEEL BAR JOIST "TOP CHORD EXTENSION"
"J.B.E." or "JBE"........ DENOTES "JOIST BEARING ELEVATION"
"T.B.E." or "TBE"........ DENOTES "TRUSS BEARING ELEVATION"
"DIA." or "ø"........ MEANS "DIAMETER"
"L.F."........ MEANS "LINEAR FEET"
"Thk."........ MEANS "THICK" or "THICKNESS"
"Sq."........ MEANS "SQUARE"
"Lg."........ MEANS "LONG" or "LENGTH"
"STD. ACI HOOK"........ DENOTES A "STANDARD ACI HOOK" IN REINFORCING STEEL, BENT TO THE ANGLE SPECIFIEC, THAT IS DETAILED AND FABRICATED IN ACCORDANCE WITH THE APPLICABLE ACI SPECIFICATIONS

"CMU" or "C.M.U."........ MEANS "CONCRETE MASONRY UNIT"
"XX FS"........ DENOTES A "FOOTING STEP", "XX" INCHES DEEP
"INT."........ MEANS "INTERIOR"
"EXT."........ MEANS "EXTERIOR"
"E.F."........ MEANS "EACH FACE"
"N.F."........ MEANS "NEAR FACE"
"F.F."........ MEANS "FAR FACE"
"I.F."........ MEANS "INSIDE FACE"
"O.F."........ MEANS "OUTSIDE FACE"
"LW"........ DENOTES "LIGHTWEIGHT CONCRETE"
"NW"........ DENOTES "NORMAL WEIGHT CONCRETE"
"N.I.C."........ MEANS "NOT IN CONTRACT"
"B" or "Bott."........ MEANS "BOTTOM"
"T"........ MEANS "TOP"
"RE:"........ MEANS "REFER TO" THE SECTION OR DETAIL LISTED FOR ADDITIONAL INFORMAITON.
e.g. "RE: A/S2.2" MEANS "REFER TO SECTION / DETAIL A ON SHEET S2.2 FOR ADDITIONAL INFORMATION"

M. SPECIAL IDENTIFICATION: ★ INDICATES CONTRACT AND CONSTRUCTION REQUIREMENTS THAT, IN THE EXPERIENCE OF THE DESIGNER, ARE (1) ESPECIALLY CRITICAL TO SAFE OR SATISFACTORY PERFORMANCE; ARE (2) FREQUENTLY NOT GIVEN ADEQUATE CONSTRUCTION QUALITY CONTROL BY THE CONTRACTOR OR SUB-CONTRACTORS; OR, ARE (3) ARE NOT "STANDARD" OR COMMON CONSTRUCTION REQUIREMENTS AND THEREFORE MAY BE SUBJECT TO CONTRACTOR OVERSIGHT IN COSTING AND / OR CONSTRUCTION.

2. DESIGN CRITERIA:

A. THE APPLICABLE BUILDING CODE FOR THIS PROJECT IS THE KENTUCKY BUILDING CODE (KBC), CURRENT (2018) EDITION. LOADS HAVE BEEN CALCULATED IN ACCORDANCE WITH ASCE 7-10.

B. PROJECT LOCATION:

TAYLORSVILLE, SPENCER COUNTY, KENTUCKY
LATITUDE: 38.0342432° N
LONGITUDE: 85.3228262° W

C. RISK CATEGORY = II (MAINTNEANCE GARAGE) – RE: ASCE 7-10, TABLE 1.5-1

D. SUPERIMPOSED DESIGN LOADS:

1.GRAVITY LOADS:
DEAD LOADS:
ROOF DEAD LOAD = PER M.B.M.
REQUIRED ROOF COLLATERAL LOAD = 10 psf
MEZZANINE FLOOR DEAD LOAD = 90 psf
LIVE LOADS:
ROOF LIVE LOAD = PER ASCE 7-10
MEZZANINE FLOOR LIVE LOAD = 150 psf

2. WIND LOAD CRITERIA:
BASIC WIND SPEED, V (3-sec GUST) = 115 mph (ULTIMATE)
EXPOSURE CATEGORY = C
MEAN ROOF HEIGHT, h = 25.0 feet
CLASSROOM HEIGHT and EXPOSURE ADJUSTMENT COEFFICIENT = 1.35

COMPONENTS & CLADDING DESIGN WIND PRESSURE:

ROOF MEMBERS (NET UPLIFT):
ZONE 1 = -29.4 psf
ZONE 2 = -29.4 psf
ZONE 3 = -66.8 psf
WALL MEMBERS:
ZONE 4 = -26.7 psf
ZONE 5 = -33.5 psf

3. SEISMIC DESIGN CRITERA:
SPECTRAL RESPONSE ACCELERATION –
@ SHORT PERIODS, Ss = 0.186g (Seismic Maps)
@ 1-sec PERIODS, S1 = 0.100g (Seismic Maps)

SEISMIC IMPORTANCE FACTOR, IE = 1.00
SEISMIC DESIGN CATEGORY = B
SITE SEISMIC CLASSIFICATION = B (PER GEOTECHNICAL)
DESIGN SPECTRAL RESPONSE ACCELERATION –

@ SHORT PERIODS, SDS = 0.124g
@ 1-sec. PERIODS, SD1 = 0.067g
ANALYSIS METHOD: EQUIVALENT LATERAL FORCE METHOD (ELFM)
BASIC SEISMIC FORCE RESISTING SYSTEM CRITERIA:
BEARING WALL SYSTEM OF INTERMEDIATE REINFORCED MASONRY SHEARWALLS

RESPONSE MODIFICATION FACTOR, R = 3.00
DEFLECTION AMPLIFICATION FACTOR, Cd = 3.00
SYSTEM OVERSTRENGTH FACTOR, Ωo = 3.00
APPROXIMATE FUNDAMENTAL PERIOD, Ta = 0.368 sec

DESIGN BASE SHEAR:
SEISMIC RESPONSE COEFFICIENT, Cs = 0.04133
TOTAL BASE SHEAR (ULTIMATE STATE) = 12.6 kips
TOTAL BASE SHEAR (ALLOWABLE STRESS) = 8.8 kips

4. SNOW LOAD CRITERIA:
GROUND SNOW LOAD = 15 psf
SNOW IMPORTANCE FACTOR, Is = 1.0
THERMAL FACTOR, Ct = 1.0
SNOW EXPOSURE FACTOR, Ce = 1.1
SNOWDRIFTS ACCOUNTED FOR IN ACCORDANCE WITH ASCE 7-10.

E. FOUNDATIONS:
1. FOUNDATION AND CONCRETE FLOOR SLAB ON GRADE DESIGNS AS WELL AS OTHER ASPECTS OF EARTHWORK AND SITE WORK FOR THIS PROJECT HAVE BEEN BASED ON GEOTECHNICAL REPORT NUMBER 61-2104 PREPARED FOR THIS PROJECT BY ESC SOUTHEAST, LLP & DATED AUGUST 27, 2019. A COPY OF THIS REPORT IS AVAILABLE FROM THE ARCHITECT FOR CONTRACTOR's USE. THE CONTRACTOR SHALL OBTAIN A COPY OF THIS REPORT AND BECOME FAMILIAR WITH AND FOLLOW THE INFORMATION AND RECOMMENDATIONS SET FORTH THEREIN. THE CONTRACTOR MUST UNDERSTAND THAT THE ACCURACY OF THE REPORT IS LIMITED TO THOSE AREA SPECIFICALLY ADDRESSED. ALL INFORMATION AND RECOMMENDATIONS CONTAINED IN THE GEOTECHNICAL REPORT MUST BE VERIFIED IN THE FIELD DURING CONSTRUCTION BY A QUALIFIED GEOTECHNICAL ENGINEER. SEE EARTHWORK, SLABS ON GRADE AND FOUNDATIONS NOTES BELOW FOR ADDITIONAL INFORMATION.

2. FOUNDATION DESIGN CRITERIA:
FOUNDATION SYSTEM – SHALLOW SPREAD FOOTINGS BEARING ON NATIVE SOIL OR PROPERLY PLACED AND COMPACTED STRUCTURAL SOIL FILL TO NATIE SOIL.

3. ALLOWABLE BEARING PRESSURES:
CONTINUOUS WALL FOOTINGS – = 2,500 psf
ISOLATED COLUMN FOOTINGS – = 3,000 psf

4. BLASTING:
BLASTING IS PROHIBITED ON THIS PROJECT.

3. EARTHWORK, SLABS ON GRADE AND FOUNDATIONS:

★ A. THE OWNER WILL ENGAGE AN INDEPENDENT GEOTECHNICAL ENGINEERING, TESTING AND INSPECTION FIRM (HEREINAFTER REFERED TO AS THE "INSPECTOR" OR "GEOTECHNICAL ENGINEER") TO MONITOR AND (WHEN APPROPRIATE) DIRECT EARTHWORK OPERATIONS AND FOUNDATION CONSTRUCTION ON THIS PROJECT. THE CONTRACTOR SHALL COOPERATE WITH THE SELECTED FIRM AND COORDINATE REQUIRED TESTING AND INSPECTIONS WITH THE GEOTECHNICAL ENGINEER TO ENSURE THAT ALL EARTHWORK IS CARRIED OUT IN ACCORDANCE WITH CONTRACT DOCUMENTS AND GEOTECHNICAL REPORT, AND THAT ALL TESTING AND INSPECTIONS SPECIFIED IN THE CONTRACT DOCUMENTS ARE COMPLETED AND DOCUMENTED. CONTRACTOR SHALL PROVIDE TWENTY-FOUR (24) HOURS (MINIMUM) NOTICE TO GEOTECHNICAL ENGINEER WHEN EARTHWORK IS TO BE PERFORMED AND / OR WHEN EARTHWORK TESTING AND INSPECTIONS ARE REQUIRED. DUTIES OF THE GEOTECHNICAL ENGINEER ARE OUTLINED IN THE SPECIAL INSPECTIONS NOTES ON SHEET S0.3.

B. AFTER SUB-GRADE PREPARATION OPERATIONS (RE: CIVIL DRAWINGS AND SPECIFICATIONS) HAVE BEEN COMPLETED AND ACCEPTED BY THE GEOTECHNICAL ENGINEER THE SLAB BASE SHALL THEN BE PLACED AND COMPACTED. THE SLAB BASE SHALL CONSIST OF SIX-INCHES (6") OF PROPERLY PLACED AND COMPACTED, WELL GRADED CRUSHED STONE (e.g. No. 57 STONE OR APPROVED EQUAL). THE STONE BASE SHALL BE COMPACTED TO 98% OF STANDARD PROCTOR DENSITY AT A MOISTURE CONTENT WITHIN 2% OF OPTIMUM. THE GEOTECHNCAL ENGINEER SHALL DIRECT AND DOCUMENT PLACEMENT & COMPACTION OF THE SLAB STONE BASE.

C. UNLESS NOTED OTHERWISE, ALL FOUNDATIONS FOR THIS PROJECT SHALL BE CONSTRUCTED AT TOP OF FOOTING ELEVATIONS AS FOLLOWS: 24" (MIN.) BELOW ADJACENT INTERIOR FLOOR SLAB ON GRADE OR 18" (MIN.) BELOW ADJACENT EXTERIOR FINISH GRADE, WHICHEVER IS LOWER.

★ D. SOFT SOILS, OLD UNCONTROLLED FILL, & HIGHLY PLASTIC (FAT) CLAYS ARE IDENTIFIED IN BORING LOGS IN THE GEOTECHNICAL REPORT. FOUNDATIONS MAY NOT BEAR ON THESE OR ANY OTHER UNSUITABLE MATERIAL. IF ANY UNSUITABLE MATERIAL (AS DETERMINED IN THE FIELD BY THE GEOTECHNICAL ENGINEER) IS ENCOUNTERED AT THE FOUNDATION BEARING ELEVATION, THE EXCAVATION SHALL BE UNDERCUT TO SUITABLE, FIRM BEARING MATERIAL. IN THE CASE OF FAT CLAYS, UNDERCUT THE FOUNDATION EXCAVATION A MINIMUM OF 24". THE WIDTH OF THE EXCAVATION SHALL BE INCREASED BY THE DEPTH OF UNDERCUT. AFTER SUITABLE BEARING MATERIAL IS ACHIEVED AND ACCEPTED BY THE GEOTECHNCIAL ENGINEER, THE EXCAVATION SHALL BE BROUGHT TO BEARING ELEVATION WITH PROPERLY PLACED & COMPACTED FILL RE: B/S2.2 – THE GEOTECHNCAL ENGINEER SHALL DIRECT AND DOCUMENT ALL UNDERCUTTING & BACKFILLING ACTIVITIES. (RE: CIVIL DRAWINGS & SPECIFICATIONS FOR FILL MATERIAL CRITERIA AS WELL AS FILL PLACEMENT AND COMPACTION REQUIREMENTS.)

3. EARTHWORK, SLABS ON GRADE AND FOUNDATIONS: (Continued)

★ E. FOUNDATION CONCRETE SHALL BE PLACED THE SAME DAY THAT THE EXCAVATION IS OPENED. THE GEOTECHNICAL REPORT INDICATES THAT THE BEARING STRATA WILL BE DEGRADED BY WETTING, DRYING AND / OR FREEZING IF THE EXCAVATION IS LEFT OPEN FOR AN EXTENDED PERIOD OF TIME. WHEN ANY EXCAVATION IS TO BE LEFT OPEN OVERNIGHT, THE CONTRACTOR SHALL UNDERCUT THE EXCAVATION AND PLACE A 4" Thick "LEAN CONCRETE" MUD MAT OVER ALL EXPOSED BEARING MATERIALS.

F. "XX F.S." DENOTES A FOOTING STEP THAT A FOOTING STEP IS REQUIRED WHERE THE BOTTOM OF FOOTING ELEVATION CHANGES. "XX" DENOTES THE DEPTH OF THE FOOTING STEP – WHERE NO DEPTH IS INDICATED, FOOTING STEP DEPTH SHALL BE FIELD DETERMINED – RE: G/S2.0 – FOOTING STEPS SHALL BE FIELD-LOCATED BY THE CONTRACTOR BASED ON ACTUAL CONDITIONS ENCOUNTERED. FOOTING STEP LOCATIONS AND DETAILS SHALL BE PROVIDED ON THE REINFORCING STEEL SHOP DRAWINGS.

G. ALL ELEVATIONS SHOWN ON THE PLANS ARE REFERENCED TO FINISH FLOOR ELEVATION 100.00' COORDINATE ELEVATIONS WITH CIVIL DRAWINGS.

4. CAST-IN-PLACE REINFORCED CONCRETE:

A. CONCRETE MIX DESIGN, PLACING, FINISHING AND TESTING SHALL CONFORMANCE TO THE REQUIREMENTS OF ACI 301, "SPECIFICATIONS FOR STRUCTURAL CONCRETE FOR BUILDINGS" BY THE AMERICAN CONCRETE INSTITUTE (ACI), LATEST EDITION.

B. DETAILING, FABRICATION AND PLACEMENT OF REINFORCING STEEL SHALL CONFORM TO THE REQUIREMENTS OF ACI 315, "DETAILS AND DETAILING OF CONCRETE REINFORCEMENT", WITH ACI 318 "BUILDING CODE REQUIREMENTS FOR REINFORCED CONCRETE" AND WITH THE CONCRETE REINFORCING STEEL INSTITUTE (CRSI) "REINFORCING BAR DETAILING MANUAL OF STANDARD PRACTICE", LATEST EDITION OF EACH.

C. THE CONTRACTOR SHALL MAINTAIN A COPY OF THE ACI "FIELD REFERENCE MANUAL"; ACI PUBLICATION SP-15 (LATEST EDITION) AT THE JOB SITE AT ALL TIMES.

D. THE OWNER WILL ENGAGE AN INDEPENDENT TESTING AND INSPECTION FIRM (HEREINAFTER REFERED TO AS THE "INSPECTOR") TO MONITOR AND INSPECT CONCRETE CONSTRUCTION, AND TEST CONCRETE MATERIALS ON THIS PROJECT. THE CONTRACTOR SHALL COOPERATE WITH THE INSPECTOR AND COORDINATE WITH INSPECTOR TO ENSURE THAT ALL TESTING AND INSPECTIONS SPECIFIED IN THE CONTRACT DOCUMENTS ARE COMPLETED AND DOCUMENTED. THE CONTRACTOR SHALL PROVIDE A MINIMUM OF TWENTY-FOUR (24) HOURS NOTICE TO THE INSPECTOR WHEN CONCRETE TESTING OR INSPECTIONS ARE REQUIRED. THE DUTIES OF THE TESTING AND INSPECTION FIRM ARE OUTLINED IN THE SPECIAL INSPECTIONS NOTES ON SHEET S0.3

E. ALL CONCRETE USED ON THIS PROJECT SHALL HAVE A MINIMUM COMPRESSIVE STRENGTH (f'c) OF 4,000 psi AT TWENTY-EIGHT (28) DAYS (UNLESS NOTED OTHERWISE). CONCRETE USED IN CONSTRUCTION CONCRETE FLOOR SLABS ON GRADE SHALL HAVE A MINIMUM COMPRESSIVE STRENGTH (f'c) OF 4,500 psi AT TWENTY-EIGHT (28) DAYS.

F. THE MAXIMUM WATER-CEMENT RATIO (W/C) FOR CONCRETE USED IN CONCRETE FLOOR SLAB CONSTRUCTION SHALL BE 0.45. ALL OTHER CONCRETE SHALL HAVE A MAXIMUM W/C OF 0.50 (UNLESS NOTED OTHERWISE).

G. ALL CONCRETE EXPOSED TO THE ELEMENTS SHALL BE AIR ENTRAINED WITH AN AIR CONTENT OF 6% (+/- 1.5%).

EXCEPTION:
ENTRAINED AIR MAY BE OMITTED FROM THE CONCRETE MIX FOR FLOOR SLABS ONLY WHEN OUTSIDE AIR-TEMPERATURE IS PREDICTED TO REMAIN ABOVE 40° FOR A PERIOD OF AT LEAST FORTY-EIGHT (48) HOURS BEGINNING WITH CONCRETE PLACEMENT.

H. REINFORCING STEEL SHALL BE DEFORMED BARS CONFORMING TO THE REQUIREMENTS OF THE AMERICAN SOCIETY FOR TESTING AND MATERIALS (ASTM) SPECIFICATION A615 GRADE 60. (U.N.O.). REINFORCING STEEL THAT IS TO BE WELDED SHALL CONFORM TO ASTM A706, GR 60.

J. UNLESS NOTED OTHERWISE IN THE DETAILS, REINFORCING FOR CONCRETE FLOOR SLABS ON GRADE SHALL BE WELDED WIRE REINFORCEMENT, WWR 6x6-W2.9xW2.9 LOCATED AT $1\frac{1}{2}$" BELOW THE TOP OF SLAB SURFACE (UNLESS NOTED OTHERWISE). WELDED WIRE REINFORCEMENT (WWR) SHALL CONFORM TO THE REQUIREMENTS OF ASTM A185. WELDED WIRE REINFORCEMENT SHALL BE PROPERLY LOCATED & SUPPORTED USING CHAIRS, BOLSTERS OR BAR SUPPORTS. "HOOKING" THE WWR & ATTEMPTING TO PULL THE MESH INTO POSITION AFTER CONCRETE IS PLACED IS NOT ACCEPTABLE. AT EDGES & ENDS OF WWR SHEETS AND / OR ROLLS, THE WELDED WIRE REINFORCEMENT SHALL BE LAPPED ONE (1) WIRE SQUARE SPACE PLUS TWO-INCHES (2") MINIMUM.

K. WELDING OF REINFORCING STEEL IS PERMITTED ONLY WITH THE PRIOR APPROVAL OF THE STRUCTURAL ENGINEER. WHERE PERMITTED, WELDING SHALL BE PERFORMED IN ACCORDANCE WITH ACI 301, SECTION 5.3. INSPECTION OF WELDING OF REINFORCING STEEL SHALL BE IN ACCORDANCE WITH TABLE 1705.2.2 OF THE KBC.

L. ALL CONCRETE REINFORCING STEEL SPLICES SHALL BE CLASS "B" TENSION LAP SPLICES (UNLESS NOTED OTHERWISE). SPLICE LENGTH SHALL BE CALCULATED IN ACCORDANCE WITH CHAPTER 5 OF THE CRSI "DESIGN HANDBOOK" (LATEST EDITION). LAP SPLICES FOR REINFORCING STEEL USED IN MASONRY CONSTRUCTION SHALL BE EQUAL TO 48 BAR DIAMETERS (MINIMUM).

M. MINIMUM CONCRETE PROTECTION FOR REINFORCING STEEL (CLEAR COVER):

1. UNFORMED SURFACE CAST AGAINST EARTH........ 3"
2. FORMED SURFACE IN CONTACT WITH EARTH........ 2½"
3. FORMED SURFACE EXPOSED TO WEATHER........ 2½"
4. FORMED SURFACE NOT EXPOSED TO WEATHER OR IN CONCTACT WITH GROUND:
   a. SLABS........ ¾"
   b. WALLS AND JOISTS........ 1½"
   c. BEAMS, GIRDERS AND COLUMNS........ 2½"
5. IN NO CASE SHALL THE CLEAR COVER BE LESS THAN THE BAR DIAMETER.

N. ALL HOOKS SHOWN ON THE DRAWINGS FOR REINFORCING STEEL SHALL BE ACI STANDARD 90° OR ACI STANDARD 180° HOOKS AS INDICATED.
1. BAR LENGTHS SHOWN ARE "OUT-TO-OUT" AND DO NOT INCLUDE HOOK LENGTH.
2. PROVIDE HOOKS FOR ALL TOP BARS IN SLABS AND BEAMS AT DISCONTINUOUS ENDS

O. PROVIDE CORNER BARS TO MATCH ALL LONGITUDINAL REINFORCING STEEL AT CORNERS AND INTERSECTIONS OF ALL CONCRETE WALLS, BEAMS, GRADE BEAMS, THICKENED SLABS, etc. CORNER BAR SIZE AND SPACING SHALL MATCH THE SIZE AND SPACING OF LONGITUDINAL BARS BEING LAPPED. PROVIDE 24" LAP FOR ALL CORNER BARS #7 AND SMALLER. PROVIDE 30" LAP FOR ALL CORNER BARS #8 AND LARGER. SEE DETAIL D/S2.0 FOR ADDITIONAL INFORMATION.

P. WHERE DOWELS ARE REQUIRED OUT OF FOUNDATION WALLS AND FOOTINGS TO MATCH VERTICAL BARS IN MASONRY WALLS, THE REBAR DETAILER FOR THE REINFORCING STEEL SUPPLIER SHALL LOCATE EACH SUCH DOWEL ON REINFORCING STEEL PLACEMENT DRAWINGS. FAILURE TO COMPLY WITH THIS REQUIREMENT WILL RESULT IN THE REJECTION OF THE REINFORCING STEEL SHOP DRAWING SUBMITTAL.

Q. "C.J." DENOTES A SLAB CONSTRUCTION JOINT OR SLAB CONTROL JOINT AT THE CONTRACTOR'S OPTION. CONTROL JOINTS SHALL BE SAW-CUT TO A DEPTH EQUAL TO ONE-QUARTER ($\frac{1}{4}$) OF THE SLAB THICKNESS. RE: A/S2.0 REGARDING SLAB CONTROL / CONSTRUCTION JOINTS:

1. THE C.J. LAYOUT SHOWN ON THE PLAN IS FOR CONCEPTUAL PURPOSES ONLY. THE CONTRACTOR SHALL LAY OUT C.J.'s AT A MAXIMUM SPACING OF 15'-0".
   a. CONTRACTOR SHALL SHOW PROPOSED C.J. LAYOUT ON REINFORCING STEEL SHOP DRAWINGS SUBMITAL.
   b. CONSTRUCTION JOINTS SHALL BE LOCATED BY THE CONTRACTOR TO FACILITATE CONCRETE PLACEMENT (UNLESS NOTED OTHERWISE).
2. NO LATER THAN ONE-WEEK AFTER SUBMITTING THE C.J. LAYOUT PLAN TO THE ARCHITECT, THE CONTRACTOR SHALL CONVENE A PRE-CONCRETE CONFERENCE AT THE JOB SITE TO RESOLVE ANY QUESTIONS THAT THE ARCHITECT, ENGINEER AND / OR CONTRACTOR MAY HAVE.
3. CONTROL JOINTS MUST BE SAW-CUT A WITHIN A MAXIMUM OF TWELVE (12) HOURS AFTER CONCRETE PLACEMENT.

4. CAST-IN-PLACE REINFORCED CONCRETE: (Continued)

R. SPECIAL ATTENTION IS DIRECTED TO SECTION 03300 OF THE SPECIFICATIONS FOR CONCRETE TESTING REQUIREMENTS AND THE DISTRIBUTION OF TEST REPORTS. ADDITIONAL INFORMATION REGARDING CONCRETE TESTING IS CONTAINED IN SPECIAL INSPECTIONS NOTES ON SHEET S0.3.

S. WHERE NEW REINFORCING STEEL IS REQUIRED OUT OF IN-PLACE CONCRETE OR CONCRETE MASONRY (CMU), DEFORMED BARS OF THE SIZE SPECIFIED ON THE DRAWINGS SHALL BE SET INTO THE HARDENED CONCRETE / CMU USING AN ACRYLIC BASED, ALL-TEMPERATURE ADHESIVE ANCHORING SYSTEM SUCH AS "ACRYLIC TIE (AT)" HIGH STRENGTH, ALL-TEMPERATURE ADHESIVE SYSTEM MANUFACTURED BY THE "SIMPSON STRONG-TIE COMPANY, INC.; 2600 INTERNATIONAL STREET; COLUMBUS, OH 43228" OR USING AN EPOXY BASED ADHESIVE ANCHORING SYSTEM SUCH AS "HILTI HIT-RE 500 V3" FOR CONCRETE AND "HILTI HIT-HY70" FOR CMU. THESE PRODUCTS ARE PRODUCED BY "HILTI; P. O. BOX 21148; TULSA, OK 74121" (OR APPROVED EQUAL). THE DEPTH OF EMBEDMENT SHALL BE AS INDICATED ON THE PLANS. WHERE NO DEPTH IS SPECIFIED, EMBEDMENT SHALL BE AS SPECIFIED BY THE ADHESIVE MANUFACTURER TO DEVELOP THE FULL YIELD STRENGTH OF THE BAR. INSTALLATION SHALL BE IN ACCORDANCE WITH NOTE 4.W (BELOW).

T. WHERE NEW ANCHOR BOLTS ARE REQUIRED OUT OF IN-PLACE CONCRETE OR CONCRETE MASONRY (CMU), THREADED RODS OF THE SIZE SPECIFIED ON THE DRAWINGS SHALL BE SET INTO THE HARDENED CONCRETE / CMU USING AN ACRYLIC BASED, ALL-TEMPERATURE ADHESIVE ANCHORING SYSTEM SUCH AS "ACRYLIC TIE (AT)" HIGH STRENGTH, ALL-TEMPERATURE ADHESIVE SYSTEM MANUFACTURED BY THE "SIMPSON STRONG-TIE COMPANY, INC.; 2600 INTERNATIONAL STREET; COLUMBUS, OH 43228" OR USING AN EPOXY BASED ADHESIVE ANCHORING SYSTEM SUCH AS "HILTI HIT-HY 200" FOR CONCRETE AND "HILTI HIT-HY70" FOR CMU. "HILTI HIT-Z" OR "HIT-Z-R" ANCHOR RODS SHALL BE USED WITH HILTI EPOXIES THESE PRODUCTS ARE PRODUCED BY "HILTI; P. O. BOX 21148; TULSA, OK 74121" (OR APPROVED EQUAL). THE DEPTH OF EMBEDMENT SHALL BE AS INDICATED ON THE PLANS. WHERE NO DEPTH IS SPECIFIED, EMBEDMENT SHALL BE AS SPECIFIED BY THE ADHESIVE MANUFACTURER TO DEVELOP THE FULL YIELD STRENGTH OF THE BAR. INSTALLATION SHALL BE IN ACCORDANCE WITH NOTE 4.W (BELOW).

U. WHERE "KWIK BOLTS" (BASIS OF DESIGN) ARE INDICATED ON THE DRAWINGS, THE CONTRACTOR SHALL INSTALL EXPANSION ANCHORS OF THE SIZE AND QUANTITY SPECIFIED. USE "KWIK BOLT TZ" EXPANSION ANCHORS FOR CONCRETE APPLICATIONS AND "KWIK BOLT 3" EXPANSION ANCHORS FOR CONCRETE MASONRY (CMU) APPLICATIONS. "KWIK BOLTS" SHALL BE MANUFACTURED BY "HILTI, CORP; P.O. BOX 21148; TULSA, OKLAHOMA 74146" OR USE "STRONG-BOLTS" (FOR CONCRETE & CMU) PRODUCED BY "SIMPSON STRONG-TIE COMPANY, INC.; 2600 INTERNATIONAL STREET; COLUMBUS, OH 43228" (OR APPROVED EQUAL). EXPANSION ANCHORS SHALL BE INSTALLED IN ACCORDANCE WITH NOTE 4.W (BELOW). WHERE NO EMBEDMENT DEPTH FOR ANCHORS IS SPECIFIED ON THE DRAWINGS, EXPANSION ANCHORS SHALL BE INSTALLED INTO CONCRETE OR MASONRY (CMU) AS SPECIFIED IN THE FOLLOWING SCHEDULE:

1.	½" ø ANCHOR	3½"	(CONCRETE)	4¼"	(CMU)
2.	⅝" ø ANCHOR	4"	(CONCRETE)	5"	(CMU)
3.	¾" ø ANCHOR	4¾"	(CONCRETE)	6"	(CMU)
4.	1" ø ANCHOR	6"	(CONCRETE)	7½"	(CMU)

AT CONTRACTOR's OPTION, EXPANSION ANCHORS MAY BE REPLACED WITH ADHESIVE ANCHORS SIMILAR TO THOSE DEFINED IN NOTE No. T (ABOVE). DEPTH OF EMBEDMENT SHALL BE AS SPECIFIED HEREIN.

V. WHERE CONCRETE SCREWS ARE INDICATED ON THE DRAWINGS, THE CONTRACTOR SHALL INSTALL CONCRETE SCREWS OF THE SIZE AND QUANTITY SPECIFIED. USE "KWIK HUS-EZ (KH-EZ)" CONCRETE SCREWS MANUFACTURED BY "HILTI, CORP; P.O. BOX 21148; TULSA, OKLAHOMA 74146" OR USE "TITEN HD" HEAVY-DUTY SCREW ANCHORS PRODUCED BY "SIMPSON STRONG-TIE COMPANY, INC.; 2600 INTERNATIONAL STREET; COLUMBUS, OH 43228" (OR APPROVED EQUAL). CONCRETE SCREWS SHALL BE INSTALLED IN ACCORDANCE WITH NOTE 4.W (BELOW). WHERE NO EMBEDMENT DEPTH IS SPECIFIED FOR ANCHORS ON THE DRAWINGS, SCREW ANCHORS SHALL BE INSTALLED INTO CONCRETE OR MASONRY (CMU) AS SPECIFIED IN THE FOLLOWING SCHEDULE:

1.	½" ø ANCHOR	4¼"	(CONCRETE)	4¼"	(CMU)
2.	⅝" ø ANCHOR	5"	(CONCRETE)	5"	(CMU)
3.	¾" ø ANCHOR	6¼"	(CONCRETE)	6¼"	(CMU)

AT CONTRACTOR's OPTION, CONCRETE SCREWS MAY BE REPLACED WITH KWIK BOLTS OR ADHESIVE ANCHORS SIMILAR TO THOSE DEFINED IN NOTE No. T (ABOVE). DEPTH OF EMBEDMENT SHALL BE AS SPECIFIED HEREIN.

★★ W. THE CONTRACTOR SHALL OBTAIN AN ICC EVALUATION SERVICE REPORT FOR EACH TYPE OF ACRYLIC / EPOXY ADHESIVE OR POST-INSTALLED ANCHOR USED ON THIS PROJECT. POST-INSTALLED ANCHOR BOLTS AND REINFORCING STEEL SHALL BE INSTALLED IN ACCORDANCE WITH ANCHOR / ADHESIVE MANUFACTURER's SPECIFICATIONS. INSTALLERS SHALL BE TRAINED IN PROPER INSTALLATION PROCEDURES BY A REPRESENTATIVE OF THE MANUFACTURER. THE INSTALLATION SHALL BE VERIFIED AND DOCUMENTED IN ACCORDANCE WITH THE APPROPRIATE ICC ES REPORT BY THE SPECIAL INSPECTOR IN ACCORDANCE WITH NOTES ON SHEET S0.3.

X. CONCRETE FINISHES:
1. FORMED SURFACES:
   a. PAINTED OR EXPOSED TO VIEW – RUBBED FINISH (U.N.O.)
   b. COVERED – AS CAST
2. FLAT WORK SURFACES:
   a. INTERIOR, EXPOSED TO VIEW – TROWELED
   b. INTERIOR, CARPETED OR TILED – TROWELED
   c. EXTERIOR, SIDEWALKS OR DRIVEWAYS – BROOMED
   d. EXTERIOR, STAIRS OR RAMPS – BROOMED

Y. PIPE OR CONDUIT EMBEDDED IN CONCRETE WALLS AND SLABS:
1. MAXIMUM DIAMETER = $\frac{1}{3}$ TIMES (SLAB OR WALL) THICKNESS
2. MINIMUM SPACING = 3 TIMES (CONDUIT OR PIPE) DIAMETER ON CENTER

Z. CONCRETE FOUNDATIONS HAVE NOT BEEN DESIGNED TO RESIST LATERAL EARTH PRESSURE. FILL ON BOTH SIDES OF FOUNDATION WALL SHALL BE PLACED AND COMPACTED IN EQUAL LIFTS AT THE SAME TIME TO ENSURE THE STABILITY OF THE WALL.

AA. WHERE INDICATED ON THE PLANS, PROVIDE CONTINUOUS PVC WATERSTOPS IN CONCRETE CONSTRUCTION JOINTS. THE CONTRACTOR SHALL HAVE RESPONSIBILITY FOR ENSURING THAT WATERSTOPS ARE CONTINUOUS AND MEET THE INTENT OF CREATING WATER-TIGHT CONSTRUCTION JOINTS. ALL PVC WATERSTOP SPLICES, CORNERS AND INTERSECTIONS SHALL BE TREATED IN ACCORDANCE WITH WATERSTOP MANUFACTURER's SPECIFICATION. ALL WATERSTOPS SHALL BE 6" FLAT, DUMBBELL PVC WITH CENTER BULB. SUBJECT TO APPROVAL, WATERSTOPS ON THIS PROJECT SHALL BE PROFILE No. 705 AS MANUFACTURED BY "GREENSTREAK PLASTIC PRODUCTS COMPANY, INC.; 3400 TREE COURT INDUSTRIAL BLVD.; ST. LOUIS, MISSOURI 63122" OR APPROVED EQUAL.

BB. WHERE INDICATED ON THE PLANS, AND AT CONTRACTOR'S OPTION TO REPLACE PVC WATERSTOPS, PROVIDE CONTINUOUS BENTONITE / BUTYL-RUBBER WATERSTOPS IN CONCRETE CONSTRUCTION JOINTS. THE CONTRACTOR SHALL HAVE RESPONSIBILITY FOR ENSURING THAT WATERSTOPS ARE CONTINUOUS AND MEET THE INTENT OF CREATING WATER-TIGHT CONSTRUCTION JOINTS. ALL BENTONITE / BUTYL-RUBBER WATERSTOP SPLICES, CORNERS & INTERSECTIONS SHALL BE TREATED IN ACCORDANCE WITH WATERSTOP MANUFACTURER's SPECIFICATION. SUBJECT TO APPROVAL, BENTONITE / BUTYL-RUBBER WATERSTOPS ON THIS PROJECT SHALL BE "WATERSTOP-RX" MANUFACTURED BY "MINERAL TECHNOLOGIES, INC.; CETCO; 2870 FORBS AVENUE; HOFFMAN ESTATES, IL 60192" OR APPROVED EQUAL.

CC. ALL KEYWAYS INDICATED ON THE DRAWINGS ARE NOMINAL 2x4 AND SHALL BE CONTINUOUS. SEE DETAIL E/S2.0 FOR ADDITIONAL INFORMATION.

DD. RUSTICATION STRIPS, CHAMFERS, DRIPS, MISCELLANEOUS EMBEDMENTS, ETC. SHALL BE PROVIDED IN ACCORDANCE WITH THE PLANS. REFERENCE THE ARCHITECTURAL DRAWINGS FOR ADDITIONAL INFORMATION. UNLESS INDICATED OTHERWISE ALL EXPOSED CONCRETE EDGES SHALL HAVE A $\frac{3}{4}$" CHAMFER.

EE. HOLES AND OPENINGS IN CONCRETE WALLS AND SLAB (GREATER THAN 10"ø FOR ROUND HOLES AND GREATER THAN 1'-0" ON ANY SIDE FOR SQUARE AND RECTANGULAR HOLES) FOR MECHANICAL, ELECTRICAL AND PLUMBING TRADES THAT ARE NOT INDICATED ON THE STRUCTURAL DRAWINGS MUST BE SUBMITTED TO THE STRUCTURAL ENGINEER FOR REVIEW AND APPROVAL. SUCH HOLES AND OPENINGS ARE TO FORMED AND NOT CUT. STRENGTHENING OR ADDITIONAL REINFORCING REQUIRED BY THE STRUCTURAL ENGINEER SHALL BE FURNISHED BY THE CONTRACTOR AT NO ADDITIONAL COST TO THE OWNER – RE: B/S2.0

SHERMAN CARTER BARNHART ARCHITECTS

STATE OF KENTUCKY
WILLIAM E. GRIGSBY, JR.
16114
LICENSED PROFESSIONAL ENGINEER

NEW SPENCER COUNTY BUS GARAGE
TAYLORSVILLE, KENTUCKY

STRUCTURAL NOTES

JOB NO.	1745
DATE	12/16/2019
DRAWN	griggs
CHECKED	WEG/BKL

COPYRIGHT © 2019 SHERMAN CARTER BARNHART ARCHITECTS, PLLC

REVISIONS

No.	Description	Date

SHEET
S0.1

5. CONCRETE MASONRY (CMU) CONSTRUCTION:

A. ALL MASONRY CONSTRUCTION SHALL MEET THE REQUIREMENTS OF ACI 530; ASCE 5; TMS 402; ACI 530.1; ASCE 6; AND TMS 602 (LATEST EDITION OF EACH).

B. THE OWNER WILL ENGAGE AN INDEPENDENT TESTING AND INSPECTION FIRM (HEREINAFTER REFERED TO AS THE "INSPECTOR") TO MONITOR AND INSPECT MASONRY CONSTRUCTION AND TEST MASONRY MATERIALS ON THIS PROJECT. THE CONTRACTOR SHALL COOPERATE WITH THE INSPECTOR AND COORDINATE BETWEEN THE MASON AND THE INSPECTOR TO ENSURE THAT ALL TESTING AND INSPECTIONS SPECIFIED IN THE CONTRACT DOCUMENTS AND AS REQUIRED BY SECTION 1705.4 OF THE KENTUCKY BUILDING CODE AND TMS 402, TMS 602, ACI 530, ACI 530.1, ASCE 5 & ASCE 6 (LEVEL B INSPECTIONS) ARE COMPLETED AND DOCUMENTED. THE CONTRACTOR SHALL PROVIDE A MINIMUM OF TWENTY-FOUR (24) HOURS NOTICE TO THE INSPECTOR WHEN MASONRY INSPECTIONS ARE REQUIRED. DUTIES OF THE TESTING AND INSPECTION FIRM ARE OUTLINED IN THE SPECIAL INSPECTIONS NOTES ON SHEET S0.3.

C. ALL CONCRETE MASONRY UNITS (CMU) SHALL HAVE A MINIMUM COMPRESSIVE STRENGTH OF 2,000 psi BASED ON THE NET AREA AND SHALL CONFORM TO ASTM C90. THE CMU SUPPLIER SHALL SUBMIT CERTIFIED TEST REPORTS TO DOCUMENT THAT THE SPECIFIED VALUE HAS BEEN MET. ALL MORTAR FOR CMU CONSTRUCTION SHALL BE TYPE "S" AND SHALL CONFORM TO ASTM C270.

D. GROUT USED FOR CMU CONSTRUCTION SHALL HAVE A MINIMUM COMPRESSIVE STRENGTH (f'g) OF 2,500 psi AND SHALL CONFORM TO ASTM C476. THE USE OF MORTAR FOR GROUTING BOND BEAMS AND CMU CELLS IS NOT ACCEPTABLE. ANY MASONRY CONSTRUCTION FOUND TO HAVE MORTAR INSTEAD OF GROUT IN CMU CELLS, BOND BEAMS AND / OR LINTELS WILL BE DEMOSLISHED, REMOVED AND RE-BUILT IN ACCORDANCE WITH THE CONTRACT DOCUMENTS AT THE CONTRACTOR's EXPENSE.

★ E. A HORIZONTAL CONSTRUCTION JOINT SHALL BE FORMED BETWEEN GROUT POURS FOR CMU CELLS BY STOPPING THE CMU WALL AT A CONTSTANT ELEVATION THROUGHOUT AND THEN HOLDING THE GROUT A MINIMUM OF 1½" AND A MAXIMUM OF 4½" BELOW THE MORTAR JOINT (EXCEPT AT TOP OF WALL). FOR CMU CELL GROUT POURS OVER FIVE-FEET (5') IN HEIGHT, A CLEANOUT SHALL BE PROVIDED IN THE BOTTOM CMU COURSE AT EVERY CELL TO BE GROUTED.

★★ F. THE MASON SHALL MECHANICALLY CONSOLIDATE AND RE-CONSOLIDATE THE GROUT IN ACCORDANCE WITH THE REQUIREMENTS OF ALL APPLICABLE CODES AND STANDARDS.

G. PROVIDE ADDITIONAL VERTICAL REINFORCEMENT FOR CMU WALLS IN GROUTED SOLID CMU CELLS AT THE END OF ALL WALLS AS WELL AS AT INTERSECTIONS, CORNERS AND AT EACH SIDE OF ALL WALL OPENINGS- RE: A/S4.0 & E/S4.0 – PROVIDE ADDITIONAL BARS IN GROUTED SOLID CMU CELLS AT BOTH SIDES OF ALL MASONRY CONTROL JOINTS AND EXPANSION JOINT – RE: D/S4.0

H. NOT USED.

★ J. ALL VERTICAL REINFORCING BARS IN MASONRY WALLS SHALL BE PROPERLY LOCATED WITHIN THE CMU CELLS USING PREFABRICATED, (GALVANIZED STEEL or PLASTIC) REBAR POSITIONERS SUCH AS THOSE MANUFACTURED BY "DUR-O-WALL" (OR APPROVED EQUAL). REBAR POSITIONERS SHALL BE LOCATED AT 48" CENTERS ON EACH VERTICAL BAR.

K. ALL VERTICAL REINFORCING BARS FOR CMU WALLS SHALL BE FULLY DEVELOPED WITH MATCHING DOWELS OUT OF THE FOUNDATION AND SHALL BE CONTINUOUS TO THE TOP OF THE WALL.

★ L. THE DETAILER FOR THE REINFORCING STEEL FABRICATOR SHALL INDICATE ALL DOWELS OUT OF FOUNDATION REQUIRED FOR MATCHING MASONRY WALL VERTICAL REINFORCING ON THE FABRICATOR's REBAR PLACEMENT DRAWINGS FOR THE CONCRETE FOUNDATION WALLS.

M. PROVIDE REINFORCED MASONRY HEADER BEAM PER DETAILS ACROSS THE TOP OF ALL CMU WALL OPENINGS. PROVIDE 8" Dp. CMU BOND BEAM ACROSS THE BOTTOM OF ALL CMU WALL OPENINGS (EXCEPT DOOR OPENINGS). RE: A/S4.0 & B/S4.0

N. SEE CAST-IN-PLACE REINFORCED CONCRETE NOTES ON SHEET S0.1 AND SPECIFICATION SECTION 033000 FOR ADDITIONAL INFORMATION REGARDING REINFORCING STEEL SPECIFICATIONS.

O. GROUTED SOLID CMU BOND BEAMS SHOWN ON THE PLANS SHALL BE CONSTRUCTED USING "KNOCK-OUT-WEB" BOND BEAM UNITS EXCEPT AT THE HEAD OF WALL OPENINGS WHERE BOND BEAM LINTEL BLOCKS SHALL BE USED AS INDICATED.

P. PROVIDE HORIZONTAL JOINT REINFORCEMENT FOR ALL CMU WALLS (INCLUDING WALLS NOT SHOWN ON STRUCTURAL DRAWINGS) CONSISTING OF PREFABRICATED "LADDER TYPE" REINFORCEMENT SUCH AS "DUR-O-WALL SEISMIC LADUR" OR APPROVED EQUAL AT 16" CENTERS (EVERY OTHER MORTAR JOINT) UNLESS NOTED OTHERWISE. PROVIDE PREFABRICATED "L's" and "T's" AT ALL WALL CORNERS AND INTERSECTIONS. SEE DETAIL E/S4.0 FOR ADDITIONAL INFORMATION.

Q. PROVIDE CORNER BARS (C.B.) TO MATCH HORIZONTAL BOND BEAM REINFORCING IN ALL CMU BOND BEAMS AT ALL MASONRY WALL CORNERS AND INTERSECTIONS. SEE DETAIL C/S4.0 FOR ADDITIONAL INFORMATION.

R. PROVIDE MASONRY CONTROL JOINTS IN ALL CMU WALLS WHERE INDICATED ON THE PLANS. IF NO CONTROL JOINTS ARE SHOWN ON THE PLANS, THE MASON SHALL PROVIDE MASONRY CONTROL JOINTS AT A MAXIMUM SPACING OF 24'-0" OR THREE (3) TIMES THE WALL HEIGHT (WHICHEVER IS LESS) FOR ALL INTERIOR AND EXTERIOR CMU WALLS. A MASONRY CONTROL JOINT SHALL ALSO BE PROVIDED WITHIN A MAXIMUM OF 12'-0" FROM ALL CORNERS FOR ALL INTERIOR AND EXTERIOR CMU WALLS. THE MASON SHALL COORDINATE THE LOCATIONS OF ALL CONTROL JOINTS WITH THE ARCHITECT. SEE DETAILS A/S4.0 & D/S4.0 FOR ADDITIONAL INFORMATION.

★ S. THE CONTRACTOR SHALL CONVENE A MEETING TO DISCUSS MASONRY DETAILS PRIOR TO THE START OF MASONRY CONSTRUCTION. MEETING ATTENDEES SHALL INCLUDE THE CONTRACTOR, THE MASON, THE ARCHITECT, THE INSPECTOR AND THE STRUCTURAL ENGINEER. THE OWNER SHALL BE INVITED TO THIS MEETING, HOWEVER, THE OWNER's ATTENDANCE OF THIS MEETING IS NOT REQUIRED.

★ T. WHERE SHRINKAGE CRACKS DEVELOP IN THE MASONRY WALLS, THE CONTRACTOR SHALL TREAT THOSE CRACKS WITH A LIQUID CRACK SEALER PRIOR TO APPLICATION OF FINAL FINISH COATING. THE LIQUID CRACK SEALER SHALL BE APPLIED IN ACCORDANCE WITH MANUFACTURER's SPECIFICATIONS. SUBJECT TO APPROVAL, THE CRACK SEALER SHALL BE "CRACK-PAC INJECTION EPOXY" MANUFACTURERED BY THE "SIMPSON STRONG-TIE COMPANY, INC.; 2600 INTERNATIONAL STREET; COLUMBUS, OH 43228" (BASIS OF DESIGN – RE: NOTE No. 1.K ON SHEET S0.1 FOR ADDITIONAL INFORMATION). THESE REPAIRS SHALL BE MADE AT NO COST TO THE OWNER.

6. STRUCTURAL STEEL:

A. DESIGN, DETAILING, FABRICATION AND ERECTION OF ALL STRUCTURAL STEEL ON THIS PROJECT SHALL BE IN ACCORDANCE WITH THE SPECIFICATIONS OF THE AMERICAN INSTITUTE OF STEEL CONSTRUCTION (AISC), ALLOWABLE STRESS DESIGN (ASD) NINTH EDITION. DESIGN SHALL BE IN ACCORDANCE WITH THE AISC "SPECIFICATIONS FOR STRUCTURAL STEEL BUILDINGS – ALLOWABLE STRESS DESIGN AND PLASTIC DESIGN" (2010 EDITION). DETAILING, FABRICATION AND ERECTION SHALL BE IN ACCORDANCE WITH THE AISC "CODE OF STANDARD PRACTICE FOR STEEL BUILDINGS AND BRIDGES" (APRIL 14, 2010).

B. THE OWNER WILL ENGAGE AN INDEPENDENT TESTING AND INSPECTION FIRM (HEREINAFTER REFERED TO AS THE "INSPECTOR") TO MONITOR STEEL ERECTION ON THIS PROJECT. THE CONTRACTOR SHALL COOPERATE WITH THE SELECTED FIRM AND COORDINATE BETWEEN THE STEEL ERECTOR AND THE INSPECTOR TO INSURE THAT ALL REQUIRED TESTING AND INSPECTIONS SPECIFIED IN THE CONTRACT DOCUMENTS ARE COMPLETED AND DOCUMENTED. CONTRACTOR SHALL PROVIDE A MINIMUM OF TWENTY-FOUR (24) HOURS NOTICE TO THE INSPECTOR WHEN STRUCTURAL STEEL INSPECTIONS ARE REQUIRED. DUTIES OF THE TESTING AND INSPECTION FIRM ARE OUTLINED IN THE SPECIAL INSPECTIONS NOTES ON SHEET S0.3.

C. THE "TYPE OF CONSTRUCTION" FOR THIS PROJECT AS DEFINED BY AISC IS: TYPE 2 – SIMPLE FRAMING.

D. ALL WIDE FLANGE (W) SHAPES SHALL BE FABRICATED FROM MATERIAL CONFORMING TO ASTM A992, GRADE 50 (Fy = 50 ksi) UNLESS NOTED OTHERWISE.

E. CHANNELS, ANGLES, PLATES AND OTHER MISCELLANEOUS STEEL SHALL BE FABRICATED FROM MATERIAL CONFORMING TO ASTM A36, (Fy = 36 ksi).

F. ALL STRUCTURAL TUBE STEEL (HOLLOW STEEL SECTIONS, HSS) SHALL BE FABRICATED FROM MATERIAL CONFORMING TO ASTM A500, GRADE C OR ASTM 1085.

6. STRUCTURAL STEEL: (CONTINUED)

G. WHERE REQUIRED ON THE PLANS, ALL HIGH STRENGTH STEEL PLATES SHALL CONFORM TO ASTM A572, GRADE 50 (Fy = 50 ksi).

H. ALL STRUCTURAL BOLTS SHALL CONFORM TO ASTM A325X. ANCHOR BOLTS SHALL CONFORM TO ASTM F1554, GR 36 (FOR ANCHOR BOLTS LESS THAN 1" IN DIAMETER) OR ASTM F1554, GRADE 50 (FOR ANCHOR BOLTS EQUAL TO OR GREATER THAN 1" IN DIAMETER). THREADED ROD SHALL CONFORM TO ASTM A36 (FOR RODS LESS THAN 1" IN DIAMETER) OR ASTM A572, GRADE 50 (FOR RODS EQUAL TO OR GREATER THAN 1" IN DIAMETER). PROVIDED A SUFFICIENT QUANTITY OF COMPATIBLE NUTS AND FLAT WASHERS FOR ALL CONNECTIONS.

J. WHERE INDICATED ON THE PLANS, PRE-TENSIONED BOLTS SHALL BE PER THE "SPECIFICATION FOR STRUCTURAL JOINTS USING ASTM A325 OR A490 BOLTS" (CURRENT EDITION). PROVIDE BOLTS OF SIZE & QUANTITY INDICATED CONFORMING TO ASTM F3125, GRADE F1852 TYPE 1, ROUND HEAD, TENSION CONTROLLED (TWIST-OFF TYPE), BOLT ASSEMBLIES (A325 BOLT, F436 FLAT WASHER AND A563 GR. DH HEAVY HEX NUTS)

K. ALL SHOP CONNECTIONS SHALL BE WELDED CONNECTION UNLESS OTHERWISE INDICATED ON THE CONTRACT DOCUMENTS. ALL FIELD CONNECTIONS SHALL BE BOLTED CONNECTIONS UNLESS OTHERWISE INDICATED ON THE CONTRACT DOCUMENTS. BOLTED CONNECTIONS SHALL BE BEARING TYPE MADE USING ASTM A325X BOLTS IN CONFORMANCE WITH THE RESEARCH COUNCIL ON STRUCTURAL CONNECTIONS (RCSC) "SPECIFICATIONS FOR STRUCTURAL JOINTS USING ASTM A325 OR A490 BOLTS". BEAM FRAMING CONNECTIONS MAY BE "SINGLE-PLATE SHEAR CONNECTIONS DETAILED IN ACCORDANCE WITH TABLE X OF THE AISC MANUAL. "USUAL GAGE" DIMENSIONS SHALL BE USED FOR LOCATING HOLES FOR BOLTS, EXPANSION ANCHORS, ETC. IN ALL ANGLE LEGS, BEAM FLANGES, ETC.

L. ALL WELDING SHALL BE IN CONFORMANCE WITH THE AMERICAN WELDING SOCIETY (AWS) CODES, STANDARDS AND SPECIFIICATIONS. ALL WELDS SHALL BE MADE USING E70XX ELECTRODES UNLESS NOTED OTHERWISE.

M. WHERE HEADED WELDING STUDS OR HEADED ANCHORS ARE SPECIFIED ON THE DRAWINGS, "NELSON STUDS" OF THE SIZE INDICATED SHALL BE AUTOMATICALLY WELDED TO THE BASE MATERIAL IN ACCORDANCE WITH THE STUD MANUFACTURER's SPECIFICATIONS. STUD LENGTH DENOTED WITH "AW" OR "A.W." ON THE DRAWINGS SHALL BE THE LENGTH OF STUD "AFTER WELDING". HEADED STUDS SHALL BE MADE FROM COLD-DRAWIN STEEL CONFORMING TO ASTM A108. SUBJECT TO APPROVAL, THE HEADED WELDING STUDS USED ON THIS PROJECT SHALL BE THE PRODUCTS OF "TRW, INC.; NELSON STUD WELDING DIVISION; 7900 WEST RIDGE ROAD; P. O. BOX 4019; ELYRIA, OHIO; 44036" (OR APPROVED EQUAL).

N. PROVIDE POSITIVE CAMBER AS NOTED ON THE PLANS. WHERE NO CAMBER IS SPECIFIED, THE RESIDUAL MILL CAMBER SHALL BE UPWARDS.

P. ALL EXPOSED ANGLE AND PLATE LINTELS FOR MASONRY CONSTRUCTION (BRICK VENEER) SHALL BE HOT-DIPPED GALVANIZED.

★★ Q. THE STRUCTURAL STEEL "FAB SHOP" THAT PROVIDES THE STEEL ON THIS PROJECT MUST BE AISC OR AWS CERTIFIED. SEE SPECIFICATION SECTION 05120 FOR MORE INFORMATION.

7. OPEN-WEB STEEL BAR JOISTS:

A. DESIGN, DETAILING, FABRICATION AND ERECTION OF ALL STEEL BAR JOISTS ON THIS PROJECT SHALL BE IN ACCORDANCE WITH THE SPECIFICATIONS OF THE STEEL JOIST INSTITUTE (SJI), LATEST EDITION.

B. SUBJECT TO APPROVAL, THE BAR JOISTS ON THIS PROJECT SHALL BE THE PRODUCTS OF "VULCRAFT, A DIVISION OF NUCOR CORP.; P. O. BOX 169; FORT PAYNE, ALABAMA 35967" (OR APPROVED EQUAL).

★ C. WHERE OSHA AND / OR THE STEEL JOIST INSTITUE SPECIFICATIONS REQUIRE ERECTION BOLTS FOR BAR JOISTS AND JOIST GIRDERS, THE BAR JOIST DETAILER SHALL INDICATE ERECTION BOLTS ON THE SHOP / ERECTION DRAWINGS. THE BAR JOIST DETAILER SHALL COORDINATE ERECTION BOLT LOCATIONS WITH THE STRUCTURAL STEEL DETAILER SO THAT BOLT HOLES ARE PROVIDED IN THE SUPPORTING STEEL STRUCTURE WHERE NECESSARY.

D. ALL BAR JOISTS SHALL BE WELDED TO THE SUPPORTING STRUCTURE IN ACCORDANCE WITH THE CONTRACT DOCUMENTS. WELDING SHALL BE IN ADDITION TO ANY ERECTION BOLTS REQUIRED BY OSHA AND / OR INDICATED ON THE SHOP DRAWINGS. SEE DETAIL G/S3.0 FOR ADDITIONAL INFORMATION.

E. ALL JOIST SHALL RECEIVE ONE SHOP COAT OF PRIMER EQUIVALENT TO SSPC 15-68T.

★ F. WHERE CONCENTRATED LOADS ARE TO BE SUPPORTED DIRECTLY FROM THE CHORDS OF BAR JOISTS, THE ATTACHMENT SHALL BE MADE IN SUCH A MANNER AND AT SUCH A LOCATION THAT LOCAL BENDING IS NOT INDUCED INTO JOIST CHORDS. WHEN THIS IS NOT POSSIBLE, THE JOISTS SHALL BE REINFORCED IN ACCORDANCE WITH SJI DETAILS. WHENEVER POSSIBLE, THE CONTRACTOR SHALL LOCATE CONCENTRATED LOADS ON THE JOIST SHOP DRAWINGS AND THE JOIST FABRICATOR SHALL REINFORCE THE JOISTS IN THE SHOP. SEE DETAIL A/S3.0 FOR ADDITIONAL INFORMATION.

★ H. THE CONTRACTOR SHALL FURNISH AND INSTALL BRIDGING FOR ALL STEEL BAR JOISTS. JOIST BRIDGING SIZE, CONFIGURATION, SPACIING AND INSTALLATION SHALL BE IN ACCORDANCE WITH SPECIFICATIONS OF THE STEEL JOIST INSTITUTE. ENDS OF JOISTS BRIDGING LINES THAT TERMINATE AT WALLS OR BEAMS SHALL BE EXTENDED AND ANCHORED THERETO BY AN APPROVED METHOD. THE STEEL JOIST DETAILER SHALL COORDINATE ATTACHMENT DETAILS WITH THE STRUCTURAL STEEL DETAILER. THE CONTRACTOR SHALL FURNISH AND INSTALL ALL ANGLES, PLATES, CONCRETE EXPANSION ANCHORS, ETC. REQUIRED TO ATTACH JOIST BRIDGING TO WALLS AND / OR STRUCTURAL STEEL FRAMING AS SPECIFIED HEREIN AND DETAILED BY THE BAR JOIST FABRICATOR's DETAILER. SEE DETAIL D/S3.0 FOR ADDITIONAL INFORMATION.

J. THE CONTRACTOR SHALL NOT ALLOW DUCTWORK, CONDUIT OR CEILINGS TO BE HUNG FROM JOIST BRIDGING.

K. ALL ROOF JOISTS SHALL BE DESIGNED FOR A NET UPLIFT OF 20 psf. THE JOIST FABRICATOR SHALL SUBMIT UPLIFT DESIGN CALCULATIONS WITH THE JOIST SHOP DRAWINGS.

L. ALL BAR JOISTS USED ON THIS PROJECT SHALL BE PRODUCED BY A FAB SHOP THAT IS CERTIFIED BY THE STEEL JOIST INSTITUTE. SEE SPECIAL INSPECTIONS NOTES ON SHEET S0.3 FOR ADDITIONAL INFORMATION.

8. METAL FORM DECK:

A. DESIGN, DETAILING, FABRICATOIN AND INSTALLATION OF ALL METAL ROOF DECK ON THIS PROJECT SHALL CONFORM TO THE SPECIFICATIONS OF THE STEEL DECK INSTITUTE (SDI). PARTICULAR ATTENTION IS DIRECTED TO THE SDI DIAPHRAGM DESIGN MANUAL (DDMD2), THE SDI MANUAL OF CONSTRUCTION WITH STEEL DECK (MOC1), THE SDI STANDARD PRACTICE DETAILS AND THE SDI DECK DAMAGE AND PENETRATION, LATEST EDITION OF EACH.

B. WHERE INDICATED ON THE PLANS, THE MEZZANINE FLOOR SLAB SHALL BE CONCRETE ON 24 GA., 1.0C24 METAL FORM DECK – SEE PLAN FOR THICKNESS. ATTACH 1.0C24 DECK TO SUPPORTING STEEL STRUCTURE USING No. 12 SELF-DRILLING, SELF-TAPPING SCREWS IN A 30/4 FASTENER LAYOUT. SIDELAP FASTENERS TO BE No. 10 SELF-DRILLING, SELF-TAPPING SCREWS AT 12" CENTERS – RE: E/S3.1

★ C. WELDING METAL DECK TO THE SUPPORTING STEEL STRUCTURE AND / OR WELDING SIDELAP ATTACHMENTS IS PROHIBITED ON THIS PROJECT.

★ D. ALL METAL DECK ON THIS PROJECT SHALL BE COLD-FORMED FROM SHEET STEEL CONFORMING TO ASTM A653 (MINIMUM TENSILE YIELD STRENGTH, Fy = 33 ksi).

E. ALL METAL DECK SHALL BE GALVANIZED PER ASTM A924 WITH A MINIMUM COATING CLASS OF G90 (Z275).

F. SUBJECT TO APPROVAL, SELF-DRILLING, SELF-TAPPING FASTENERS USED TO ATTACH METAL DECK TO SUPPORTING STEEL STRUCTURE ON THIS PROJECT SHALL BE "HILTI" SELF-DRILLING SCREWS OF THE SIZE SPECIFIED, MANUFACTURERED BY "HILTI; P. O. BOX 21148; TULSA, OKLAHOMA 74121" (BASIS OF DESIGN).

G. SUBJECT TO APPROVAL, THE METAL ROOF DECK ON THIS PROJECT SHALL BE THE PRODUCTS OF "VULCRAFT, A DIVISION OF NUCOR CORP.; P. O. BOX 1000; ST. JOE, INDIANA 46785" (BASIS OF DESIGN RE: NOTE No. 1.K ON SHEET S0.1 FOR ADDITIONAL INFORMATION)

8. METAL FORM DECK: (CONTINUED)

★ H. WHERE POSSIBLE, THE METAL FORM DECK SHALL BE CONTINUOUS OVER THREE (3) OR MORE SUPPORTS.

J. THE CONTRACTOR SHALL FURNISH AND INSTALL THE METAL FORM DECK MANUFACTURER's STANDARD METAL FORM DECK ACCESSORIES (e.g. FILLER PLATES, FLAT PLATES, CLOSURE STRIPS, POUR STOPS, ETC.) WHERE APPLICABLE.

★ K. THE CONTRACTOR SHALL VERIFY THE SIZE AND LOCATION OF ALL REQUIRED FLOOR OPENINGS WITH MECHANICAL, PLUMBING, ELECTRICAL, AND OTHER TRADE SUB-CONTRACTORS. PROVIDE AN ANGLE FRAME (L4x4x ¼) FOR ALL OPENINGS GREATER THAN 1'-0" x 1'-0". INDICATE OPENING LOCATIONS AND SIZES ON THE SHOP DRAWINGS. SEE DETAIL C/S3.1 FOR ADDITIONAL INFORMATION.

9. PRE-ENGINEERED METAL BUILDING:

A. THE DESIGN, DETAILING, FABRICATION AND ERECTION OF THIS PRE-ENGINEERED METAL BUILDING SHALL CONFORM TO THE RECOMMENDATIONS & REQUIREMENTS OF THE MBMA (METAL BUILDING MANUFACTURER's ASSOCIATION) "DESIGN PRACTICES MANUAL" AND THE AISC "SPECIFICATIONS FOR THE DESIGN, FABRICATION & ERECTION OF STRUCTURAL STEEL BUILDINGS AND BRIDGES", THE AMERICAN IRON AND STEEL INSTITUTE (AISI) "SPECIFICATION FOR THE DESIGN OF COLD FORMED STEEL STRUCTURAL MEMEBERS", THE AISI "DESIGN OF LIGHT GAUGE STEEL DIAPHRAGMS", THE AMERICAN WELDING SOCIETY (AWS) "STANDARD CODE FOR ARC AND GAS WELDING IN BUILDING CONSTRUCTION", AND THE 2007 KENTUCKY BUILDING CODE (KBC 2007).

B. DESIGN, DETAIL, FABRICATE AND ERECT ALL COMPONENTS OF THE PRE-ENGINEERED METAL BUILDING TO RESIST ALL LIVE LOADS, DEAD LOADS, WIND LOADS, SEISMIC LOADS, ETC. IN ACCORDANCE WITH ALL APPLICABLE CODES AND STANDARDS.

C. SUBMIT DRAWINGS (SHOP AND ERECTION) AND CALCULATIONS TO THE ARCHITECT FOR REVIEW PRIOR TO THE START OF FABRICATION FOR THE PRE-ENGINEERED METAL BUILDING (MB). THE DRAWINGS SHALL BE CHECKED AND APPROVED BY THE CONTRACTOR PRIOR TO SUBMITTING TO THE ARCHITECT FOR REVIEW. THE DRAWINGS AND CALCULATIONS SHALL BE STAMPED AND SIGNED BY A PROFESSIONAL ENGINEER, LICENSED IN THE COMMONWEALTH OF KENTUCKY AND EXPERIENCED IN STRUCTURAL ENGINEERING.

D. FOUNDATIONS HAVE NOT BEEN DESIGNED TO RESIST MOMENTS. ALL METAL BUILDING COLUMNS SHALL BE DESIGNED ASSUMING A "PINNED" BASE.

E. IN ORDER TO PROVIDE CLEAR ACCESS TO THE GARAGE AND AVOID INTERFERENCE AT WINDOWS, NO X-BRACING IS PERMITTED ALONG COLUMN LINES A & D. PORTAL FRAMES ARE INDICATED ON THE PLAN BETWEEN COLUMNS A3 & A4 AND BETWEEN COLUMNS D3 & D4. THE PORTAL FRAME COLUMNS SHALL BE DESIGNED ASSUMING A "PINNED" BASE.

★ F. THE FOUNDATIONS FOR THIS PRE-ENGINEERED METAL BUILDING (MB) HAVE BEEN DESIGNED BASED ON PRELIMINARY COLUMN REACTIONS LISTED IN THE CHART ON SHEET S3.0. COLUMN REACTIONS IN THAT CHART MUST BE VERIFIED AGAINST CERTIFIED COLUMN REACTIONS FROM THE METAL BUILDING MANUFACTURER PRIOR TO THE START OF CONSTRUCTION. SUBMIT CERTIFIED COLUMN REACTIONS AND COLUMN BASE PLATE DETAILS TO THE ARCHITECT FOR VERIFICATION OF THE FOUNDATION DESIGN PRIOR TO START OF FOUNDATION CONSTRUCTION. A MINIMUM OF TEN (10) WORKING DAYS WILL BE REQUIRED AFTER RECEIPT OF CERTIFIED DESIGN DATA TO COMPLETE THE FOUNDATION VERIFICATION AND MAKE NECESSARY DRAWING CHANGES.

10. LIGHT GAUGE METAL FRAMING:

A. ALL LIGHT-GAUGE STRUCTURAL METAL FRAMING (METAL STUDS, HEADERS AND ACCESSORIES) SHALL BE OF THE TYPE, SIZE, GAUGE AND SPACING SHOWN ON THE DRAWINGS. THE LIGHT-GAUGE METAL FRAMING COMPONENTS SHALL BE THE PRODUCTS OF "STEEL STRUCTURAL SYSTEMS (TRI-S); 150 ROCHESTER DRIVE; LOUISVILLE, KENTUCKY 40214" (OR APPROVED EQUAL).

★ B. ALL LIGHT-GAUGE METAL FRAMING SHALL BE DESIGNED, DETAILED, FABRICATED AND INSTALLED IN ACCORDANCE WITH THE "SPECIFICATIONS FOR THE DESIGN OF COLD-FORMED STRUCTURAL MEMBERS" BY THE AMERICAN IRON AND STEEL INSTITUTE (AISI), LATEST EDITION.

C. ALL LIGHT-GAUGE METAL FRAMING SHALL BE COLD-FORMED FROM CORROSION-RESISTANT STEEL THAT CONFORMS TO THE REQUIREMENTS OF ASTM1003. STRUCTURAL STUDS AND JOISTS SHALL HAVE A MINIMUM YIELD STRENGTH OF 50 ksi (U.N.O.). TRACK RUNNERS & OTHER ACCESSORIES SHALL HAVE A MINIMUM YIELD STRENGTH OF 33 ksi (U.N.O.).

D. ALL LIGHT-GAUGE METAL FRAMING SHALL BE ZINC COATED (GALVANIZED) IN ACCORDANCE WITH THE REQUIREMENTS OF ASTM A1003 – G60.

E. THE LIGHT-GAUGE METAL FRAMING DETAILS SHOWN ON THE CONTRACT DOCUMENTS ARE FOR CONCEPTUAL PURPOSES ONLY. THE ACTUAL DETAILS OF CONSTRUCTION FOR THE LIGHT-GAUGE METAL FRAMING SYSTEM SHALL BE THE RESPONSIBILITY OF THE LIGHT-GAUGE METAL COMPONENT SUPPLIER. THE LIGHT-GAUGE METAL COMPONENT SUPPLIER SHALL SUBMIT SHOP DRAWINGS AND CALCULATIONS FOR ALL LIGHT-GAUGE METAL FRAMING (INCLUDING METAL STUDS, METAL JOISTS, AS WELL AS ALL OTHER MISCELLANEOUS ITEMS AND ACCESSORIES, ETC. NECESSARY TO COMPLETE THE LIGHT-GAUGE METAL FRAMING SYSTEM INDICATED ON THE CONTRACT DOCUMENTS) TO THE ARCHITECT FOR REVIEW. DRAWINGS AND CALCULATIONS SHALL BE CERTIFIED, STAMPED AND SIGNED BY A LICENSED PROFESSIONAL ENGINEER, REGISTERED IN THE COMMONWEALTH OF KENTUCKY AND EXPERIENCED IN STRUCTURAL ENGINEERING.

SHERMAN CARTER BARNHART
ARCHITECTS

COMMONWEALTH OF KENTUCKY
WILLIAM E. GRIGSBY, JR.
16114
LICENSED PROFESSIONAL ENGINEER

NEW SPENCER COUNTY BUS GARAGE
TAYLORSVILLE, KENTUCKY

STRUCTURAL NOTES

JOB NO.	1745
DATE	12/16/2019
DRAWN	griggs
CHECKED	WEG/BKL

COPYRIGHT © 2019
SHERMAN CARTER BARNHART
ARCHITECTS, PLLC

REVISIONS

No.	Description	Date

SHEET

S0.2

SPECIAL INSPECTIONS

GENERAL

THIS STRUCTURAL QUALITY ASSURANCE PLAN IDENTIFIES THE RESPONSIBILITIES OF THE CONTRACTOR AND THE SPECIAL INSPECTOR IN PERFORMING THE TESTING AND INSPECTION OF WORK REQUIRED BY CHAPTER 17 OF THE BUILDING CODE THAT IS WITHIN THE SCOPE OF THE STRUCTURAL ENGINEERING SERVICES FOR THIS PROJECT. REFER TO OTHER PORTIONS OF THE CONSTRUCTION DOCUMENTS FOR TESTING AND INSPECTIONS REQUIRED OF ARCHITECTURAL, MECHANICAL, ELECTRICAL, OR OTHER BUILDING COMPONENTS.

CONTRACTOR RESPONSIBILITIES

THE CONTRACTOR SHALL SUBMIT TO THE BUILDING OFFICIAL AND THE ARCHITECT A WRITTEN STATEMENT OF RESPONSIBILITY THAT CONTAINS THE FOLLOWING:

1. ACKNOWLEDGMENT OF AWARENESS OF THE SPECIAL REQUIREMENTS CONTAINED WITHIN THIS STRUCTURAL QUALITY ASSURANCE PLAN.

2. ACKNOWLEDGMENT THAT CONTROL SHALL BE EXERCISED TO OBTAIN CONFORMANCE WITH THE CONSTRUCTION DOCUMENTS APPROVED BY THE BUILDING OFFICIAL.

3. PROCEDURES FOR EXERCISING CONTROL WITHIN THE CONTRACTOR's ORGANIZATION, THE METHOD AND FREQUENCY OF REPORTING, AND THE DISTRIBUTION OF REPORTS.

4. IDENTIFICATION AND QUALIFICATIONS OF THE PERSON(S) EXERCISING SUCH CONTROL AND THEIR POSITION(S) IN THE ORGANIZATION.

THE STRUCTURAL TESTING/INSPECTION AGENCY THAT IS TO ACT AS THE SPECIAL INSPECTOR SHALL BE HIRED BY THE OWNER AND SHALL BE APPROVED BY THE BUILDING OFFICIAL. THE STRUCTURAL TESTING/INSPECTION AGENCY SHALL SUBMIT THE NAME AND QUALIFICATIONS OF ITS PERSONNEL THAT WILL ACT AS THE SPECIAL INSPECTOR. IF MULTIPLE STRUCTURAL TESTING/INSPECTION AGENCIES ARE USED, SUBMIT THE INFORMATION STATED ABOVE FOR EACH FIRM ALONG WITH A STATEMENT OF THE SPECIAL INSPECTION RESPONSIBILITIES FOR EACH FIRM.

THE CONTRACTOR SHALL PAY FOR ANY ADDITIONAL STRUCTURAL TESTING/INSPECTION REQUIRED FOR WORK OR MATERIALS NOT COMPLYING WITH THE CONSTRUCTION DOCUMENTS DUE TO NEGLIGENCE OR NONCONFOMANCE AND SHALL PAY FOR ANY ADDITIONAL STRUCTURAL TESTING/INSPECTION REQUIRED FOR HIS CONVENIENCE.

CONTRACTOR IS RESPONSIBLE TO ENSURE THAT THE SPECIAL INSPECTOR IS PRESENT FOR ALL WORK REQUIRING SPECIAL INSPECTION. ANY WORK THAT REQUIRES SPECIAL INSPECTION AND IS PERFORMED WITHOUT THE SPECIAL INSPECTOR BEING PRESENT IS SUBJECT TO BEING DEMOLISHED, RE-CONSTRUCTED, AND RE-INSPECTED AT THE CONTRACTOR's EXPENSE.

THE CONTRACTOR HAS THE FOLLOWING RESPONSIBILITIES TO THE SPECIAL INSPECTOR:

1. PROVIDE A COPY OF THE CONSTRUCTION DOCUMENTS TO THE SPECIAL INSPECTOR.

2. NOTIFY THE SPECIAL INSPECTOR SUFFICIENTLY IN ADVANCE OF OPERATIONS TO ALLOW ASSIGNMENT OF PERSONNEL AND SCHEDULING OF TESTS.

3. COOPERATE WITH SPECIAL INSPECTOR AND PROVIDE ACCESS TO WORK.

4. PROVIDE SAMPLES OF MATERIALS TO BE TESTED IN REQUIRED QUANTITIES.

5. PROVIDE STORAGE SPACE FOR THE SPECIAL INSPECTOR's EXCLUSIVE USE, SUCH AS FOR STORING AND CURING CONCRETE TESTING SAMPLES.

6. PROVIDE LABOR TO ASSIST THE SPECIAL INSPECTOR IN PERFORMING TESTS/INSPECTIONS.

★ WHEN THE CONTRACTOR CALLS FOR SPECIAL INSPECTIONS AND IS NOT READY WHEN THE INSPECTOR ARRIVES ON SITE, THE CONTRACTOR SHALL BE RESPONSIBLE TO PAY FOR THE INSPECTOR's WASTED TIME.

SPECIAL INSPECTOR RESPONSIBILITIES

SPECIAL INSPECTOR SHALL MAINTAIN RECORDS OF INSPECTIONS IN ACCORDANCE WITH CHAPTER 17 OF THE BUILDING CODE AND SHALL DISTRIBUTE THESE RECORDS TO THE BUILDING OFFICIAL, ARCHITECT, AND STRUCTURAL ENGINEER ON A WEEKLY BASIS. AT THE CONCLUSION OF THE PROJECT THE SPECIAL INSPECTOR SHALL SUBMIT A WRITTEN STATEMENT THAT THE SPECIAL INSPECTIONS DURING CONSTRUCTION HAVE COMPLIED WITH THIS STRUCTURAL QUALITY ASSURANCE PLAN AND THAT ANY DISCREPENCIES NOTED DURING CONSTRUCTION HAVE BEEN CORRECTED. ANY AND ALL DISCREPENCIES SHALL BE BROUGHT TO THE ATTENTION OF THE CONTRACTOR, THE CONSTRUCTION MANAGER AND THE ARCHITECT IMMEDIATELY.

SOILS

THE SPECIAL INSPECTOR SHALL PERFORM THE FOLLOWING:

1. VERIFY THAT THE STRUCTURAL FILL COMPLIES WITH SPECIFICATIONS AND THE PROJECT GEOTECHNICAL REPORT.

2. OBSERVE PROOFROLLING

3. PERFORM FIELD DENSITY TESTS TO VERIFY COMPACTION OF STRUCTURAL FILL. AS A MINIMUM, PERFORM ONE TEST PER LIFT FOR EVERY 2500 SQUARE FEET OF FILL PLACED.

4. VERIFY FOUNDATION BEARING CAPACITY.

5. PERFORM ANY AND ALL OTHER TESTS THAT MAY BE REQUIRED BY THE KENTUCKY BUILDING CODE.

CAST IN PLACE CONCRETE

THE CONTRACTOR SHALL PERFORM THE FOLLOWING:

1. SUBMIT MILL TEST REPORTS.

2. SUBMIT MANUFACTURER's DATA FOR TENSILE AND COMPRESSIVE SPLICERS.

3. ESTABLISH CONCRETE MIX DESIGN PROPORTIONS PER ACI 318, CHAPTER 5. SUBMIT THREE COPIES OF EACH CONCRETE MIX DESIGN. PROVIDE COPIES OF EACH CONCRETE MIX DESIGN TO THE SPECIAL INSPECTOR. NCLUDE THE FOLLOWING:

   A. TYPE AND QUANTITIES OF MATERIALS
   B. SLUMP
   C. AIR CONTENT
   D. FRESH UNIT WEIGHT
   E. AGGREGATES SIEVE ANALYSIS
   F. DESIGN COMPRESSIVE STRENGTH
   G. LOCATION OF PLACEMENT IN STRUCTURE
   H. METHOD OF PLACEMENT
   J. METHOD OF CURING
   K. SEVEN-DAY AND 28-DAY COMPRESSIVE STRENGTHS

4. SUBMIT A CERTIFICATION FROM EACH MANUFACTURER OR SUPPLIER STATING THAT THE MATERIALS MEET THE REQUIRMENTS OF THE SPECIFIED ASTM AND ACI STANDARDS.

5. SUBMIT CERTIFICATION THAT THE READY-MIXED CONCRETE PLANT COMPLIES WITH THE REQUIREMENTS OF THE NATIONAL READY MIX CONCRETE ASSOCIATION.

SPECIAL INSPECTOR SHALL PERFORM THE FOLLOWING:

1. VERIFY GRADE, QUANTITY, LOCATION, AND PLACEMENT OF REINFORCING STEEL PRIOR TO CONCRETE PLACEMENT.

2. EXAMINE CONCRETE IN TRUCK TO VERIFY THAT CONCRETE APPEARS PROPERLY MIXED.

3. PERFORM A SLUMP TEST AS DEEMED NECESSARY FOR EACH CONCRETE LOAD. RECORD IF WATER OR ADMIXTURES ARE ADDED TO THE CONCRETE AT THE JOB SITES. PERFORM ADDITIONAL SLUMP TESTS AFTER JOB SITE ADJUSTMENTS.

4. MOLD FOUR SPECIMENS PER SET FOR COMPRESSIVE STRENGTH TESTING; ONE SET FOR EACH 75 CUBIC YARDS OF EACH MIX DESIGN PLACED IN ANY ONE DAY. FOR EACH SET MOLDED, RECORD:

   A. SLUMP
   B. AIR CONTENT
   C. UNIT WEIGHT
   D. TEMPERATURE, AMBIENT AND CONCRETE
   E. LOCATION OF PLACEMENT
   F. ANY PERTINENT INFORMATION, SUCH AS ADDITION OF WATER, ADDITION OF ADMIXTURERS, ETC.

   PERFORM ONE 7-DAY AND TWO 28-DAY COMPRESSIVE STRENGTH TESTS. (USE ONE AS A SPARE TO BE BROKEN AS DIRECTED BY THE STRUCTURAL ENGINEER IF COMPRESSIVE STRENGTH'S DO NOT APPEAR ADEQUATE.)

5. REPORTS OF COMPRESSIVE STRENGTH TESTS SHALL CONTAIN THE PROJECT IDENTIFICATION NAME AND NUMBER, DATE AND CONCRETE PLACEMENT, NAME OF THE CONCRETE TESTING AGENCY, CONCRETE DESIGN COMPRESSIVE STRENGTH, LOCATION OF CONCRETE PLACEMENT IN STRUCTURE, CONCRETE MIX PROPORTIONS AND MATERIALS, COMPRESSIVE BREAKING STRENGTH AND TYPE OF BREAK.

6. MONITOR PLACEMENT OF STRUCTURAL LIGHTWEIGHT CONCRETE PLACED BY PUMPING.

7. PERFORM ANY AND ALL OTHER TESTS THAT MAY BE REQUIRED BY THE KENTUCKY BUILDING CODE.

★★ POST-INSTALLED ANCHOR BOLTS & REINFORCING STEEL IN CONCRETE & CONCRETE MASONRY

THE CONTRACTOR SHALL PERFORM THE FOLLOWING:

1. SUBMIT MANUFACTURER's DATA FOR CONCRETE EXPANSION ANCHORS.

2. SUBMIT MANUFACTURER's DATA FOR ADHESIVE ANCHORING EPOXY.

3. SUBMIT MANUFACTURER'S DATA FOR MECHANICAL CONCRETE ANCHORS (CONCRETE SCREWS)

4. PROVIDE ICC EVALUATION SERVICE REPORT TO SPECIAL INSPECTOR FOR EACH TYPE OF POST INSTALLED ANCHOR USED ON THIS PROJECT.

5. NOTIFY THE INSPECTOR 24-HOURS IN ADVANCE THAT POST INSTALLED ANCHORS AND / OR REINFORCING STEEL ARE SCHEDULED TO BE INSTALLED AND REQUIRE INSPECTION.

SPECIAL INSPECTOR SHALL PERFORM THE FOLLOWING:

1. VERIFY THAT INSTALLERS HAVE BEEN TRAINED BY A REPRESENTATIVE OF THE ANCHOR MANUFACTURER.

2. INSPECT ALL POST-INSTALLED ANCHORS IN ACCORDANCE WITH THE REQUIREMENTS OF THE ICC EVALUATION SERVICE REPORT FOR THAT INDIVIDUAL ANCHOR.

3. PERFORM ANY AND ALL OTHER TESTS THAT MAY BE REQUIRED BY THE MANUFACTURER AND / OR KENTUCKY BUILDING CODE.

NON-SHRINK GROUT UNDER STEEL BASE PLATES

THE CONTRACTOR SHALL PERFORM THE FOLLOWING:

1. SUBMIT MILL TEST REPORTS.

2. SUBMIT GROUT MANUFACTURER's DATA FOR TENSILE AND COMPRESSIVE SPLICERS.

3. SUBMIT A CERTIFICATION THE GROUT EACH MANUFACTURER OR SUPPLIER STATING THAT THE MATERIALS MEET THE REQUIRMENTS OF THE SPECIFIED ASTM AND ACI STANDARDS.

SPECIAL INSPECTOR SHALL PERFORM THE FOLLOWING:

1. COMPRESSIVE STRENGTHS TEST PER ASTM C109.

2. NUMBER OF TESTS: ONE TEST FOR EACH TEN BAGS OF GROUT USED OR MINIMUM OF ONE TEST FOR EACH DAY OF GROUTING. (NOTE: SEVEN GROUT CUBES ARE REQUIRED FOR ONE TEST – ONE CUBE TO BE USED AS A SPARE TO BE BROKEN AS DIRECTED BY THE STRUCTURAL ENGINEER IF COMPRESSIVE STRENGTH'S DO NOT APPEAR ADEQUATE.)

3. CUBE SIZES: 2-INCH x 2-INCH

4. TEST SCHEDULE: ONE CUBE AT 3 DAYS, TWO CUBES AT 7 DAYS, THREE CUBES AT 28 DAYS.

5. PERFORM ANY AND ALL OTHER TESTS THAT MAY BE REQUIRED BY THE KENTUCKY BUILDING CODE.

CONCRETE MASONRY

THE CONTRACTOR SHALL PERFORM THE FOLLOWING:

1. SUBMIT A CERTIFICATION FROM EACH MANUFACTURER OR SUPPLIER STATING THAT THE FOLLOWING MATERIALS COMPLY WITH THE SPECIFIED ASTM OR ACI STANDARDS.

   A. CONCRETE MASONRY UNITS
   B. MORTAR MATERIALS, PORTLAND CEMENT, HYDRATED LIME, AND AGGREGATES
   C. GROUT MATERIALS: PORTLAND CEMENT AND AGGREGATES
   D. JOINT REINFORCEMENT STEEL
   E. REINFORCING STEEL

2. SUBMIT SHOP DRAWINGS FOR REINFORCING STEEL USED IN CONCRETE MASONRY WALLS.

THE SPECIAL INSPECTOR SHALL PERFORM THE FOLLOWING:

1. VERIFY COMPRESSIVE STRENGTH OF CONCRETE MASONRY UNITS, MORTAR, AND COARSE GROUT FOR EVERY 5,000 SQ. FT. OF SURFACE AREA AS FOLLOWS:

   A. THREE (3) CONCRETE MASONRY UNITS SHALL BE TESTED IN ACCORDANCE WITH ASTM C140.
   B. SIX (6) MORTAR CUBE SPECIMENS SHALL BE TESTED, THREE (3) AT 7-DAYS AND THREE (3) AT 28-DAYS, IN ACCORDANCE WITH ASTM C109
   C. FOUR (4) COARSE GROUT SPECIMENS SHALL BE TESTED, TWO (2) AT 7-DAYS AND TWO (2) AT 28-DAYS, IN ACCORDANCE WITH ASTM C1019
   D. IN LIEU OF INDIVIDUAL TESTS OF MASONRY UNITS, MORTAR, AND GROUT, PERFORM ONE (1) PRISM TEST (WHICH CONSISTS OF THREE PRISMS) IN ACCORDANCE WITH ASTM E447

1. PROVIDE CONTINUOUS INSPECTION TO VERIFY COMPLIANCE OF THE FOLLOWING:

   A. CLEANLINESS OF GROUT SPACE PRIOR TO GROUTING
   B. PLACEMENT OF GROUT IN REINFORCED CELLS
   C. CONSOLIDATION AND RE-CONSOLIDATION OF GROUT
   D. PREPARATION OF REQUIRED GROUT AND MORTAR SPECIMENS
   E. WELDING OF REINFORCING BARS

3. PROVIDE PERIODIC INSPECTION TO VERIFY COMPLIANCE OF THE FOLLOWING:

   A. PROPORTIONS OF SITE-PREPARED MORTAR AND GROUT
   B. CONSTRUCTION OF MORTAR JOINTS
   C. QUANTITY, SIZE, LOCATION, AND SUPPORT OF REINFORCING STEEL
   D. QUANTITY, SIZE, AND PLACEMENT OF HORIZONTAL JOINT REINFORCEMENT
   E. TYPE, SIZE AND LOCATION OF ANCHORS
   F. PROTECTION OF MASONRY DURING COLD OR HOT WEATHER.

4. PERFORM ANY AND ALL OTHER TESTS THAT MAY BE REQUIRED BY THE KENTUCKY BUILDING CODE.

STRUCTURAL STEEL

THE CONTRACTOR SHALL PROVIDE THE FOLLOWING:

1. SUBMIT CERTIFICATION THAT THE FABRICATOR IS REGISTERED AND APPROVED BY THE BUILDING OFFICIAL TO PERFORM REQUIRED WORK WITHIN SPECIAL INSPECTIONS.

2. IF THE FABRICATOR IS NOT REGISTERED AND APPROVED, SPECIAL INSPECTION OF THE FABRICATED ITEMS SHALL BE REQUIRED. SPECIAL INSPECTOR SHALL VERIFY THAT THE FABRICATOR MAINTAINS DETAILED FABRICATION AND QUALITY CONTROL PROCEDURES THAT PROVIDE A BASIS FOR INSPECTION CONTROL OF THE WORKMANSHIP AND THE FABRICATOR's ABILITY TO CONFORM TO APPROVED CONSTRUCTION DOCUMENTS AND REFERENCED STANDARDS. SPECIAL INSPECTOR SHALL REVIEW THE PROCEDURES FOR COMPLETENESS AND ADEQUACY RELATIVE TO THE CODE REQUIREMENTS FOR THE FABRICATOR's SCOPE OF WORK.

3. SUBMIT CERTIFIED MILL TEST REPORTS FOR STRUCTURAL STEEL.

4. SUBMIT MANUFACTURER's CERTIFICATE OF COMPLIANCE FOR HIGH-STRENGTH BOLTING AND WELD FILLER MATERIALS.

SPECIAL INSPECTOR SHALL PERFORM THE FOLLOWING

1. PROVIDE CONTINUOUS INSPECTION TO VERIFY COMPLIANCE OF THE FOLLOWING:

   A. COMPLETE AND PARTIAL PENETRATION GROOVE WELDS. ULTRASONICALLY INSPECT 100% OF THE COMPLETE PENETRATION WELDS.
   B. MULTI-PASS FILLET WELDS AND SINGLE-PASS FILLET WELDS GREATER THAN $\frac{5}{16}$"

2. PROVIDE PERIODIC INSPECTION TO VERIFY COMPLIANCE OF THE FOLLOWING:

   A. MATERIAL VERIFICATION OF HIGH-STRENGTH BOLTS, NUTS, AND WASHERS
   B. MATERIAL VERIFICATION OF WELD FILLER MATERIAL
   C. VERIFICATION OF ANCHOR ROD SIZE, CONFIGURATION, AND EMBEDMENT PRIOR TO PLACEMENT OF CONCRETE
   D. VISUALLY INSPECT ALL BOLTED CONNECTIONS IN ACCORDANCE WITH AISC SPECIFICATIONS FOR STRUCTURAL JOINTS USING ASTM A325 OR A490 BOLTS. PRIOR TO VISUAL AND PHYSICAL TESTING, TENSION TESTING USING A CALIBRATION DEVICE (SKIDMORE-WILHELM) MUST INDICATE TENSIONS AT LEAST 0.5% IN EXCESS OF THE AISC MINIMUM. STRUCTURAL STEEL ERECTOR SHALL SUPPLY THE TENSION CALIBRATION DEVICE. TEST A MINIMUM OF 10% OF THE BOLTED CONNECTIONS
   E. VISUALLY INSPECT ALL FIELD-WELDED CONNECTIONS. VISUAL INSPECTION OF WELDED JOINTS INCLUDES PERIODIC EXAMINATION OF FITUP
   F. VERIFY STUD SHEAR CONNECTOR SPACING AND LOCATION. VISUALL INSPECT WELDING OF STUD SHEAR CONNECTORS.

3. WELD INSPECTIONS TO INCLUDE THE FOLLOWING

   A. WELD INSPECTIONS SHALL BE IN ACCORDANCE WITH AWS D1.1
   B. REVIEW AND VERIFY COMPLIANCE OF WRITTEN WELDING PROCEDURES WITH AWS REQUIREMENTS
   C. VERIFY THAT WELDING PROCEDURES ARE BEING ADHERED TO DURING FIELD WELDING.
   D. VERIFY WELDER QUALIFICATIONS
   E. USE ALL MEANS NECESSARY TO DETERMINE THE QUALITY OF WELDS. THE INSPECTOR MAY USE GAMMA RAY, MAGNAFLUX, TREPANNING, SONICS OR ANY OTHER AID TO VISUAL INSPECTION THAT THE SPECIAL INSPECTOR MAY DEEM NECESSARY TO BE ASSURED OF THE ADEQUACY OF THE WELD
   F. KEEP A SYSTEMATIC RECORD OF ALL WELDS THAT INCLUDES, IN ADDITION TO OTHER REQUIRED RECORDS, THE IDENTIFICATION MARKS OF WELDERS, A LIST OF DEFECTIVE WELDS, AND THE MANNER OF CORRECTING DEFECTS.

4. PERFORM ANY AND ALL OTHER TESTS THAT MAY BE REQUIRED BY THE KENTUCKY BUILDING CODE.

STEEL JOIST

THE CONTRACTOR SHALL PROVIDE THE FOLLOWING:

1. SUBMIT MILL CERTIFICATION THAT THE SUPPLIED STEEL COMPLIES WITH THE SPECIFICATIONS.

2. SUBMIT CERTIFICATION THAT THE FABRICATOR IS REGISTERED AND APPROVED BY THE BUILDING OFFICIAL TO PERFORM REQUIRED WORK WITHIN SPECIAL INSPECTIONS.

3. IF THE FABRICATOR IS NOT REGISTERED AND APPROVED, SPECIAL INSPECTION OF THE FABRICATED ITEMS SHALL BE REQUIRED. SPECIAL INSPECTOR SHALL VERIFY THAT THE FABRICATOR MAINTAINS DETAILED FABRICATION AND QUALITY CONTROL PROCEDURES THAT PROVIDE A BASIS FOR INSPECTION CONTROL OF THE WORKMANSHIP AND THE FABRICATOR's ABILITY TO CONFORM TO APPROVED CONSTRUCTION DOCUMENTS AND REFERENCED STANDARDS. SPECIAL INSPECTOR SHALL REVIEW THE PROCEDURES FOR COMPLETENESS AND ADEQUACY RELATIVE TO THE CODE REQUIREMENTS FOR THE FABRICATOR's SCOPE OF WORK.

THE SPECIAL INSPECTOR SHALL PERFORM PERIODIC INSPECTIONS OF THE FOLLOWING:

1. VISUAL INSPECTION OF BOLTED AND WELDED CONNECTIONS.

2. VERIFY INSTALLATION OF BRIDGING BRACES.

3. VERIFY CONNECTIONS FOR TOP AND BOTTOM CHORDS.

4. VERIFY REINFORCEMENT OF MEMBERS FOR CONCENTRATED LOADS.

5. VERIFY PROPER BEARING.

6. PERFORM ANY AND ALL OTHER TESTS THAT MAY BE REQUIRED BY THE KENTUCKY BUILDING CODE.

STEEL DECK

THE CONTRACTOR SHALL PERFORM THE FOLLOWING:

1. SUBMIT MILL CERTIFICATION THAT THE SUPPLIED STEEL COMPLIES WITH THE SPECIFICATIONS.

2. SUBMIT CERTIFICATION THAT THE FABRICATOR IS REGISTERED AND APPROVED BY THE BUILDING OFFICIAL TO PERFORM REQUIRED WORK WITHIN SPECIAL INSPECTIONS.

3. IF THE FABRICATOR IS NOT REGISTERED AND APPROVED, SPECIAL INSPECTION OF THE FABRICATED ITEMS SHALL BE REQUIRED. SPECIAL INSPECTOR SHALL VERIFY THAT THE FABRICATOR MAINTAINS DETAILED FABRICATION AND QUALITY CONTROL PROCEDURES THAT PROVIDE A BASIS FOR INSPECTION CONTROL OF THE WORKMANSHIP AND THE FABRICATOR's ABILITY TO CONFORM TO APPROVED CONSTRUCTION DOCUMENTS AND REFERENCED STANDARDS. SPECIAL INSPECTOR SHALL REVIEW THE PROCEDURES FOR COMPLETENESS AND ADEQUACY RELATIVE TO THE CODE REQUIREMENTS FOR THE FABRICATOR's SCOPE OF WORK.

THE SPECIAL INSPECTOR SHALL PERFORM PERIODIC INSPECTIONS OF THE FOLLOWING:

1. VERIFY GENERAL ALIGNMENT AND DECK LAP.

2. VERIFY WELDS FOR SIZE AND PATTERN.

3. VERIFY SPACING AND TYPE OF SIDELAP ATTACHMENTS.

4. VERIFY INSTALLATION OF DECK CLOSURES.

COLD FORMED (LIGHT-GAUGE) FRAMING

THE CONTRACTOR SHALL PERFORM THE FOLLOWING:

1. SUBMIT MILL CERTIFICATION THAT THE SUPPLIED STEEL COMPLIES WITH THE SPECIFICATIONS.

THE SPECIAL INSPECTOR SHALL PERFORM THE FOLLOWING

1. VERIFY THAT GENERAL ARRANGEMENT AND INSTALLATION OF LIGHT-GAUGE STEEL FRAMING IS IN ACCORDANCE WITH THE CONTRACT DOCUMENTS.

2. VERIFY THAT FRAMING MEMBERS AND CONNECTIONS ARE NOT DAMAGED.

SHERMAN CARTER BARNHART
ARCHITECTS

STATE OF KENTUCKY
WILLIAM E. GRIGSBY, JR.
16114
LICENSED PROFESSIONAL ENGINEER

NEW SPENCER COUNTY BUS GARAGE
TAYLORSVILLE, KENTUCKY

STRUCTURAL NOTES
SPECIAL INSPECTIONS

JOB NO.	1745
DATE	12/16/2019
DRAWN	griggs
CHECKED	WEG/BKL

COPYRIGHT © 2019
SHERMAN CARTER BARNHART
ARCHITECTS, PLLC

REVISIONS

No.	Description	Date

SHEET

S0.3

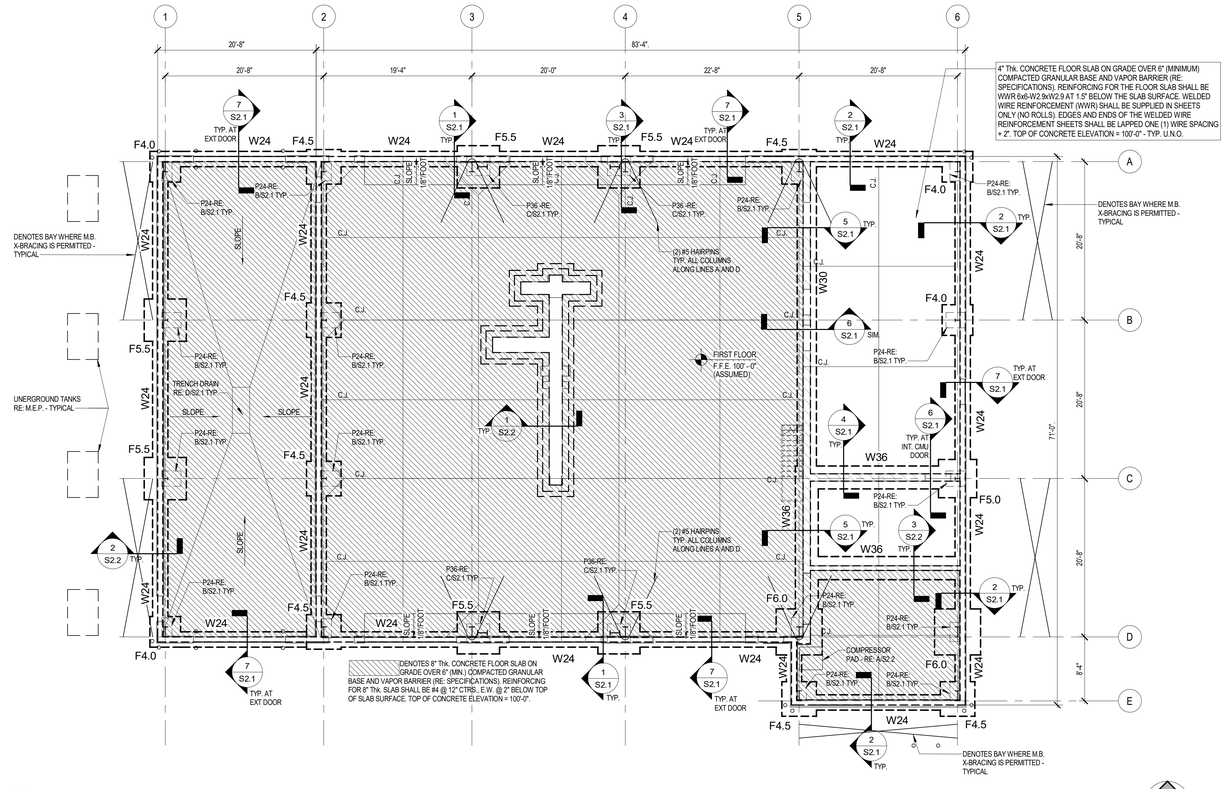

1 Foundation Plan
1/8" = 1'-0"

NOTES:

1. SEE SHEET S0.1 FOR GENERAL STRUCTURAL NOTES AND DEFINITIONS OF ABBREVIATIONS USED THROUGHOUT THESE DRAWINGS.

2. SEE SHEET S0.1 FOR STRUCTURAL DESIGN CRITERIA.

3. SEE SHEET S0.1 FOR GEOTECHNICAL DATA AND REQUIREMENTS ALONG WITH STRUCTURAL NOTES PERTAINING TO THE TESTING AND PREPARATION OF THE SUBGRADE FOR CONCRETE FLOOR SLABS ON GRADE AND BEARING STRATA FOR CONTINUOUS WALL FOOTINGS AND ISOLATED COLUMN FOOTINGS.

4. SEE SHEET S0.1 FOR STRUCTURAL NOTES PERTAINING TO CONCRETE MIX DESIGN, REINFORCING STEEL, AND REINFORCED CONCRETE CONSTRUCTION.

5. SEE SHEET S0.2 FOR STRUCTURAL NOTES PERTAINING TO REINFORCED CONCRETE MASONRY (CMU) CONSTRUCTION.

6. SEE SHEET S0.2 FOR STRUCTURAL NOTES PERTAINING TO STRUCTURAL STEEL CONSTRUCTION, AS WELL AS CONSTRUCTION UTILIZING OPEN-WEB BAR JOIST AND METAL FORM DECK.

7. SEE SHEET S0.2 FOR NOTES PERTAINING TO PRE-ENGINEERED METAL BUILDING (M.B.) DESIGN AND CONSTRUCTION.

8. SEE SHEET S0.3 FOR NOTES PERTAINING TO THE SPECIAL INSPECTIONS REQUIRED ON THIS PROJECT BY CHAPTER 17 OF THE 2018 KENTUCKY BUILDING CODE (KBC).

9. "F#" DENOTES COLUMN FOOTING. SEE SHEET S2.0 FOR THE "ISOLATED COLUMN FOOTING SCHEDULE".

10. "W#" DENOTES WALL FOOTING. SEE SHEET S2.0 FOR THE "CONTINUOUS WALL FOOTING SCHEDULE.

11. "P#" DENOTES A REINFORCED CONCRETE PIER - RE "B/S2.1" AND "C/S2.1".

12. "C.J." DENOTES A SLAB "CONTROL JOINT" OR "CONSTRUCTION JOINT" - RE: "A/S2.0".

13. "F.S." DENOTES A FOOTING STEP - RE: "G/S2.0" - THE CONTRACTOR SHALL FIELD LOCATE AND FIELD DETERMINE REQUIRED DEPTH OF FOOTING STEPS BASED ON CONDITIONS ENCOUNTERED IN THE FIELD.

14. PROVIDED ADDITIONAL REINFORCING AROUND OPENINGS IN ALL STRUCTURAL (REINFORCED) CONCRETE WALLS AND SLABS - RE: "B/S2.0".

15. PROVIDE ADDITIONAL REINFORCING REQUIRED AT ALL RE-ENTRANT CORNERS IN CONCRETE FLOOR SLABS ON GRADE - RE: "C/S2.0".

16. PROVIDE CORNER BARS IN CONCRETE WALLS AT ALL CORNERS AND WALL INTERSECTIONS - RE: "D/S2.0".

17. PROVIDE CORNER BARS IN CMU BOND BEAMS AT ALL CORNERS AND WALL INTERSECTIONS - RE: "C/S4.0".

18. ALL KEYWAYS INDICATED IN THE SECTIONS AND DETAILS SHALL BE 2x4 UNLESS NOTED OTHERWISE RE: "E/S2.0".

19. THE FIRST FLOOR CONCRETE FLOOR SLAB ON GRADE FOR THIS PROJECT SHALL BE CONSTRUCTED AT FINISH FLOOR ELEVATION 100'-0" - RE: CIVIL DRAWINGS.

20. SOFT SOILS, OLD UNCONTROLLED FILL, AND HIGHLY PLASTIC (FAT) CLAYS ARE INDICATED IN BORING LOGS IN THE GEOTECHNICAL REPORT. FOUNDATIONS MAY NOT BEAR ON THESE OR ANY OTHER UNSUITABLE MATERIAL. IF ANY UNSUITABLE MATERIAL (AS DETERMINED IN THE FIELD BY THE GEOTECHNICAL ENGINEER) IS ENCOUNTERED AT THE FOUNDATION BEARING ELEVATION, THE EXCAVATION SHALL BE UNDERCUT TO SUITABLE, FIRM BEARING MATERIAL. IN THE CASE OF FAT CLAYS, UNDERCUT THE FOUNDATION EXCAVATION A MINIMUM OF 24". THE WIDTH OF THE EXCAVATION SHALL BE INCREASED BY THE DEPTH OF THE UNDERCUT. AFTER SUITABLE BEARING MATERIAL IS ACHIEVED AND ACCEPTED BY THE GEOTECHNICAL ENGINEER, THE EXCAVATION SHALL BE BROUGHT TO BEARING ELEVATION WITH PROPERLY PLACED AND COMPACTED FILL RE:B/S2.2 - THE GEOTECHNICAL ENGINEER SHALL DIRECT AND DOCUMENT ALL UNDERCUTTING AND BACKFILLING ACTIVITIES. (RE: CIVIL DRAWINGS AND SPECIFICATIONS FOR FILL MATERIAL CRITERIA AS WELL AS FILL PLACEMENT AND COMPACTION REQUIREMENTS).

21. ALL FOUNDATIONS FOR THIS PROJECT SHALL BE CONSTRUCTED AT THE TOP OF FOOTING ELEVATION 98'-0" (U.N.O.). THIS ELEVATION IS BASED ON THE BEST AVAILABLE INFORMATION.THE CONTRACTOR SHALL COORDINATE w/SITE DRAWINGS AND INFORM ENGINEER OF ANY DISCREPANCIES PRIOR TO START OF CONSTRUCTION.

22. THE CONCRETE FLOOR SLAB ON GRADE IN THE GARAGE, WASH BAY AND MAINTANANCE SHOP SHALL BE 8" Thick OVER 6" (MIN.) COMPACTED GRANULAR BASE AND VAPOR BARRIER (RE: SPECIFICATIONS) - REINFORCING FOR THE CONCRETE FLOOR SLAB ON GRADE SHALL BE 4 BARS AT 12" CTRS. E.W. LOCATED AT 2" BELOW SLAB SURFACE. THE REINFORCING STEEL SHALL BE PROPERLY LOCATED AND SUPPORTED USING CHAIRS, BAR SUPPORTS OR BOLSTERS. BAR SPLICES SHALL BE CLASS A TENSION LAP SPLICES AND SHALL BE STAGGERED.

23. THE CONCRETE FLOOR SLAB ON GRADE IN THE ADMINISTRATION AREA SHALL BE 4" Thick OVER 6" (MIN.) COMPACTED GRANULAR BASE AND VAPOR BARRIER (RE: SPECIFICATIONS). REINFORCING FOR THE CONCRETE FLOOR SLAB ON GRADE SHALL BE WWR 6x6-W2.9xW2.9 LOCATED AT 1 1/2" BELOW SLAB SURFACE. THE WELDED WIRE REINFORCEMENT (WWR) SHALL SUPPLIED IN SHEETS ONLY (NO ROLLS). WWR SHALL BE PROPERLY LOCATED AND SUPPORTED USING CHAIRS, BAR SUPPORTS OR BOLSTERS. EDGES AND ENDS OF THE WELDED WIRE REINFORCEMENT SHEETS SHALL BE LAPPED ONE (1) WIRE SPACING + 2".

24. PROVIDE BOND BREAKER CONSISTING OF TWO (2) LAYERS OF 15# CONSTRUCTION FELT OR SELF-ADHERED MEMBRANE BOND BREAKER BETWEEN CONCRETE FLOOR SLABS ON GRADE AND ALL CONCRETE AND CMU FOUNDATION WALLS - "A/S2.0".

25. THE CONTRACTOR SHALL COORDINATE UNDERGROUND UTILITIES WITH FOOTINGS AND FOUNDATION WALLS AND ENSURE THAT ADEQUATE CLEARANCE IS PROVIDED BETWEEN UTILITIES AND FOUNDATION ELEMENTS - RE: "J/S2.0" FOR ADDITIONAL INFORMATION WHERE PIPES, CONDUITS INTERFERE WITH FOUNDATION WALLS/FOOTINGS OR COLUMN FOUNDATIONS.

26. SEE DETAIL "B/S3.1" FOR ANCHOR BOLT DETAILS.

27. THE MASON SHALL PROVIDE MASONRY CONTROL JOINTS (M.C.J.) IN ALL CMU WALLS. MASONRY CONTROL JOINTS SHALL BE CONSTRUCTED IN ACCORDANCE WITH NOTE No. 5-R ON SHEET S0.2 AS WELL AS DETAILS "A/S4.0" AND "D/S4.0". CONTRACTOR SHALL COORDINATE MCJ LOCATIONS WITH ARCHITECTURAL DRAWINGS.

28. ALL CMU WALLS (INCLUDING THOSE NOT SHOWN ON STRUCTURAL DRAWINGS) SHALL BE REINFORCED WITH HORIZONTAL JOINT REINFORCING AS SPECIFIED IN NOTE No. 5.P ON SHEET S0.2.

29. ALL VERTICAL REINFORCING BARS FOR MASONRY (CMU) CONSTRUCTION (CMU WALLS AND COLUMNS) SHALL BE CONTINUOUS FROM TOP OF FOUNDATION TO TOP OF WALL AND SHALL BE FULLY DEVELOPED WITH MATCHING DOWELS OUT OF THE FOUNDATION (U.N.O.). BAR SPLICES FOR CMU CONSTRUCTION SHALL BE FORTY-EIGHT (48) DIAMETERS.

30. PROVIDE ADDITIONAL VERTICAL REINFORCING IN GROUTED SOLID CMU CELLS AT ALL MASONRY WALL CORNERS AND INTERSECTIONS AS WELL AS AT THE END OF ALL WALLS AND AT ALL WALL OPENING JAMBS RE: "E/S4.0" - PROVIDE ADDITIONAL DOWELS OUT OF FOUNDATION TO MATCH EXTRA BARS.

31. FLOOR DRAINS SHALL BE LOCATED PER ARCHITECTURAL DRAWINGS AND INSTALLED PER M.E.P. DRAWINGS. SLOPE SLABS AS INDICATED WHERE SHOWN ON THE ARCHITECTURAL DRAWINGS. PROVIDE SLAB RECESS PER DETAIL "F/S2.0" AS INDICATED ON THE ARCHITECTURAL DRAWINGS.

32. THE CONTRACTOR SHALL COORDINATE ALL DIMENSIONS SHOWN ON THE STRUCTURAL DRAWINGS WITH ARCHITECTURAL DRAWINGS. DIMENSIONAL DISCREPANCIES SHALL BE RECTIFIED PRIOR TO STARTING CONSTRUCTION. REFER TO ARCHITECTURAL DRAWINGS FOR DIMENSIONS NOT SHOWN ON THE STRUCTURAL DRAWINGS.

33. X-BRACING IS PERMITTED ALONG COLUMN LINES 1, 2, 5, 6 AND E. X-BRACING ALONG COLUMN LINES 2 AND 6 SHALL BE LOCATED TO AVOID INTERFERENCE WITH WINDOWS AND DOORS.

34. SEE METAL BUILDING COLUMN LOAD SCHEDULE ON SHEET S3.0 FOR THEORETICAL LOADS USED TO DESIGN METAL BUILDING (M.B.) COLUMN FOUNDATIONS.

35. PROVIDE SLAB RECESS PER DETAIL F/S2.0 AS INDICATED ON THE ARCHITECTURAL DRAWINGS.

SHERMAN CARTER BARNHART ARCHITECTS

STATE OF KENTUCKY
WILLIAM E. GRIGSBY, JR.
16114
LICENSED PROFESSIONAL ENGINEER

NEW SPENCER COUNTY BUS GARAGE

TAYLORSVILLE, KENTUCKY

FOUNDATION PLAN

JOB NO.	1745
DATE	12/16/2019
DRAWN	DEM
CHECKED	WEG/BKL

COPYRIGHT © 2019
SHERMAN CARTER BARNHART ARCHITECTS, PLLC

REVISIONS

No.	Description	Date

SHEET

S1.1

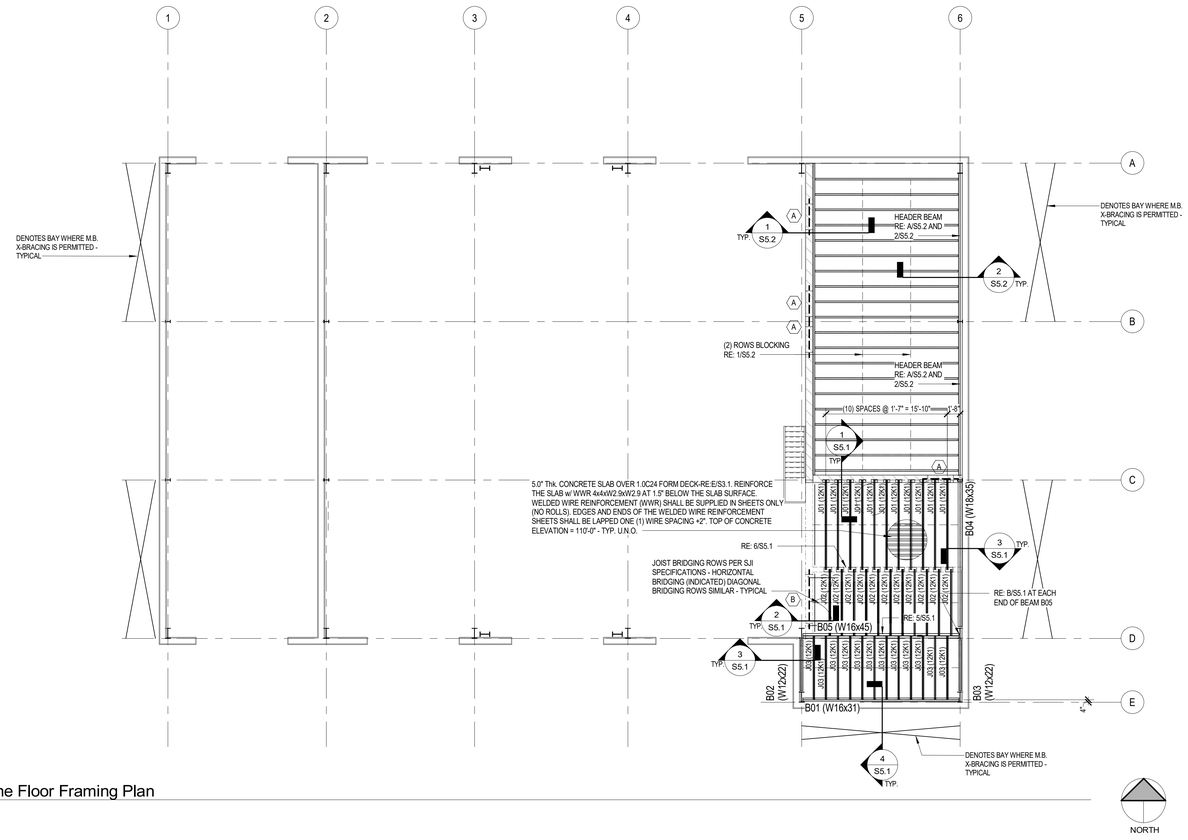

1 Mezzanine Floor Framing Plan
1/8" = 1'-0"

NOTES:

1. SEE SHEET S0.1 FOR GENERAL NOTES AND FOR DEFINITIONS OF ABBREVIATIONS USED THROUGHOUT THESE DRAWINGS.

2. SEE SHEET S0.1 FOR STRUCTURAL DESIGN CRITERIA.

3. SEE SHEET S0.1 FOR GEOTECHNICAL DATA AND REQUIREMENTS ALONG WITH STRUCTURAL NOTES PERTAINING TO THE TESTING AND PREPARATION OF THE SUBGRADE FOR CONCRETE FLOOR SLABS ON GRADE AND BEARING STRATA FOR CONTINUOUS WALL FOOTINGS AND ISOLATED COLUMN FOUNDATIONS.

4. SEE SHEET S0.1 FOR STRUCTURAL NOTES PERTAINING TO CONCRETE MIX DESIGN, REINFORCING STEEL AND REINFORCED CONCRETE CONSTRUCTION.

5. SEE SHEET S0.2 FOR STRUCTURAL NOTES PERTAINING TO REINFORCED CONCRETE MASONRY (CMU) CONSTRUCTION.

6. SEE SHEET S0.2 FOR STRUCTURAL NOTES PERTAINING TO STRUCTURAL STEEL CONSTRUCTION, AS WELL AS CONSTRUCTION UTILIZING OPEN-WEB STEEL BAR JOISTS AND METAL FORM DECK.

7. SEE SHEET S0.3 FOR NOTES PERTAINING TO THE SPECIAL INSPECTIONS REQUIRED ON THE PROJECT BY CHAPTER 17 OF THE 2018 KENTUCKY BUILDING CODE (KBC).

8. SEE DETAIL A/S3.1 FOR ADDITIONAL INFORMATION REGARDING SUPPORTING CONCENTRATED LOADS ON OPEN-WEB STEEL BAR JOISTS.

NOTES:

9. SEE DETAIL C/S3.1 FOR ADDITIONAL INFORMATION REGARDING ANGLE FRAMES REQUIRED FOR OPENINGS IN METAL FORM DECK.

10. SEE DETAIL D/S3.1 FOR ADDITIONAL INFORMATION REGARDING HORIZONTAL BRIDGING FOR OPEN-WEB STEEL BAR JOISTS.

11. SEE DETAIL E/S3.1 FOR ADDITIONAL INFORMATION REGARDING ATTACHMENT OF METAL FORM DECK TO THE SUPPORTING STEEL STRUCTURE.

12. SEE DETAIL G/S3.1 FOR ADDITIONAL INFORMATION REGARDING ATTACHMENT OF OPEN-WEB STEEL BAR JOISTS TO THE SUPPORTING STRUCTURE.

13. SEE NOTE NO. 23 ON SHEET S1.1 FOR SLAB ON GRADE CRITERIA.

14. WHERE INDICATED ON THE PLAN, THE UPPER LEVEL FLOOR STRUCTURE SHALL BE 5" Thk. CONCRETE SLAB ON 1.0C24 METAL FORM DECK. PROVIDE WELDED WIRE REINFORCEMENT (WWR) 4x4-W2.9x2W2.9 AT 1" BELOW THE SLAB SURFACE - RE: E/S3.1.

15. THE MEZZANINE LEVEL FLOOR TOP OF CONCRETE ELEVATION SHALL BE 110'-0".

16. SEE DETAIL F/S3.1 AND ACCOMPANYING SCHEDULE FOR CONNECTION DETAILS WHERE STEEL BEAMS FRAME INTO STEEL COLUMNS AND/OR OTHER STEEL BEAMS.

NOTES:

17. THE MASON SHALL PROVIDE MASONRY CONTROL JOINTS (MCJ) SPACED AT 24'-0" (MAXIMUM) CENTERS. MASONRY CONTROL JOINTS SHALL BE CONSTRUCTED IN ACCORDANCE WITH DETAIL D/S4.0 AND NOTE NO. 5-S ON SHEET S0.2. SEE DETAIL A/S4.0 FOR MORE INFORMATION REGARDING MASONRY CONTROL JOINT (MCJ) LAYOUT. THE CONTRACTOR SHALL COORDINATE MCJ LOCATIONS w/ARCHITECTURAL DRAWINGS.

18. LETTERS IN HEXAGONS (A) DENOTE GROUTED SOLID, REINFORCED MASONRY (CMU) HEADER BEAMS OVER WALL OPENINGS IN THE MASONRY (CMU) WALLS. SEE DETAILS A/S4.0 AND B/S4.0 FOR ADDTIONAL INFORMATION. THE REINFORCING STEEL DETAILER SHALL DETAIL ALL MASONRY HEADER BEAMS ON THE REINFORCING STEEL SHOP DRAWINGS. SEE SCHEDULE ON SHEET S4.0 FOR MASONRY HEADER REINFORCING.

19. NUMEROUS HVAC AND MECHANICAL WALL OPENINGS AND PENETRATIONS ARE REQUIRED THROUGH CONCRETE MASONRY (CMU) WALLS ON THIS PROJECT. THE CONTRACTOR SHALL COORDINATE THE EXACT SIZE AND LOCATION OF ALL WALL OPENINGS BETWEEN MASON AND ALL OTHER TRADES REQUIRING WALL PENETRATIONS. MASONRY CONTRACTOR SHALL CONSTRUCT THE REQUIRED HEADERS IN CMU WALLS OVER OPENINGS PER DETAILS A/S4.0 AND THE HEADER SCHEDULE ON SHEET S4.0.

NOTES:

20. WHERE OPENINGS IN MASONRY WALLS ARE INDICATED ON ARCHITECTURAL DRAWINGS AND NOT SHOWN ON THE STRUCTURAL DRAWINGS, PROVIDE A REINFORCED MASONRY HEADER PER THE APPLICABLE DETAILS REFERENCED HEREIN. HEADER BEAM REINFORCING DETAILS SHALL BE FOR THE OPENING IN THE SCHEDULE THAT IS MOST SIMILAR TO THE OPENING IN QUESTION.

21. PROVIDE STEEL BEARING PLATES PER DETAIL H/S3.1 UNDER ALL OPEN-WEB STEEL BAR JOISTS BEARING ON MASONRY WALLS.

22. ALL CMU WALLS (INCLUDING THOSE NO SHOWN ON STRUCTURAL DRAWINGS) SHALL BE REINFORCED WITH HORIZONTAL JOINT REINFORCING AS SPECIFIED IN NOTE NOS. 5-P ON SHEET S0.2.

23. PROVIDE ADDITIONAL VERTICAL REINFORCING IN GROUTED SOLID CMU CELLS AT ALL MASONRY WALL CORNERS AND INTERSECTIONS AS WELL AS AT THE END OF ALL WALLS AND AT ALL WALL OPENING JAMBS PER DETAIL E/S4.0. PROVIDE ADDITIONAL DOWELS OUT OF FOUNDATION TO MATCH EXTRA BARS.

24. PROVIDE BOND BREAKER CONSISTING OF TWO (2) LAYERS OF 15# CONSTRUCTION FELF OR SELF-ADHERED MEMBRANE BOND BREAKER BETWEEN CONCRETE FLOOR SLABS (ON GRADE, AND/OR FORM DECK) AND CMU WALLS.

25. THE CONTRACTOR SHALL COORDINATE ALL DIMENSIONS SHOWN ON THE STRUCTURAL DRAWINGSWITH ARCHITECTURAL DRAWINGS. REFER TO ARCHITECTURAL DRAWINGS FOR DIMENSIONS NOT SHOWN ON STRUCTURAL DRAWINGS. DIMENSIONAL DISCREPENCIES SHALL BE RECTIFIED PRIOR TO STARTING CONSTRUCTION.

26. SEE DETAIL A/S3.0 FOR SEISMIC FORCES TO BE RESISTED BY THE METAL BUILDING FRAME.

SHERMAN CARTER BARNHART ARCHITECTS

STATE OF KENTUCKY
WILLIAM E. GRIGSBY, JR.
16114
LICENSED PROFESSIONAL ENGINEER

NEW SPENCER COUNTY BUS GARAGE

TAYLORSVILLE, KENTUCKY

MEZZANINE FLOOR FRAMING PLAN

JOB NO.	1745
DATE	12/16/2019
DRAWN	DEM
CHECKED	WEG/BKL

COPYRIGHT © 2019
SHERMAN CARTER BARNHART ARCHITECTS, PLLC

REVISIONS

No.	Description	Date

SHEET

S1.2

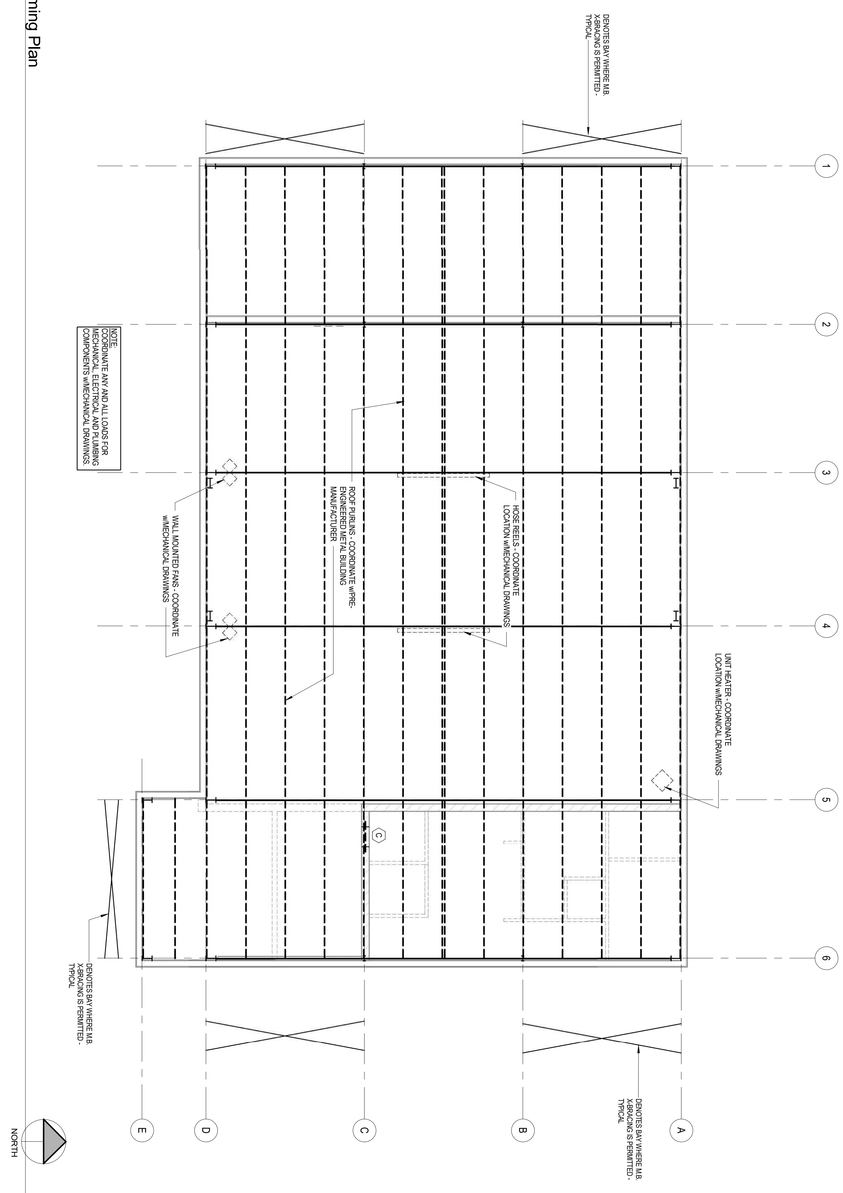

1 Roof Framing Plan
1/8" = 1'-0"

JOB NO.	1745
DATE	12/16/2019
DRAWN	DEM
CHECKED	WEG/BKL

COPYRIGHT © 2019
SHERMAN CARTER BARNHART
ARCHITECTS, PLLC

REVISIONS

No.	Description	Date

SHEET
S1.3

ROOF FRAMING PLAN

NEW SPENCER COUNTY BUS GARAGE

TAYLORSVILLE, KENTUCKY

STATE OF KENTUCKY
WILLIAM E. GRISSOM JR.
16114
LICENSED PROFESSIONAL ENGINEER

SHERMAN CARTER BARNHART
ARCHITECTS

ISOLATED COLUMN FOOTING SCHEDULE

FOOTING MARK No.	FOOTING SIZE	REINFORCING FOR ONE (1) FOOTING		REMARKS
		TOP BARS	BOTTOM BARS	
F3.5	3'-6"x 3'-6"x 1'-3" Thick	NONE REQUIRED	(5) #5 BARS, E.W.	
F4.0	4'-0"x 4'-0"x 1'-3" Thick	NONE REQUIRED	(5) #5 BARS, E.W.	
F4.5	4'-6"x 4'-6"x 1'-3" Thick	NONE REQUIRED	(5) #5 BARS, E.W.	
F5.0	5'-0"x 5'-0"x 1'-3" Thick	NONE REQUIRED	(6) #5 BARS, E.W.	
F5.5	5'-6"x 5'-6"x 1'-3" Thick	NONE REQUIRED	(6) #6 BARS, E.W.	
F6.0	6'-0"x 6'-0"x 1'-3" Thick	NONE REQUIRED	(6) #6 BARS, E.W.	

NOTES:

1. THE ISOLATED COLUMN FOOTINGS DETAILED IN THIS SCHEDULE ARE BASED THE ALLOWABLE SOIL BEARING PRESSURE (q) SPECIFIED ON S0.1 (REFERENCE THE GEOTECHNICAL REPORT FOR ADDITIONAL INFORMATION).

2. "E.W." DENOTES THAT THE SIZE AND QUANTITY OF BARS SPECIFIED ARE TO BE PROVIDE "EACH WAY" IN THE FOOTING.

3. THE "Long" DESIGNATION DENOTES THE THE SIZE AND QUANTITY OF BARS SPECIFIED ARE TO BE PROVIDE IN THE "LONG" DIMENSION OF A RECTANGULAR FOOTING.

4 THE "Short" DESIGNATION DENOTES THE THE SIZE AND QUANTITY OF BARS SPECIFIED ARE TO BE PROVIDE IN THE "SHORT" DIMENSION OF A RECTANGULAR FOOTING.

CONTINUOUS WALL FOOTING SCHEDULE

FOOTING MARK No.	FOOTING SIZE	REINFORCING FOR ONE (1) FOOTING		REMARKS
		TOP BARS	BOTTOM BARS	
W24	CONT. 2'-0" Wide x 1'-0" Thick	NONE REQUIRED	(3) CONT. #4 BARS, Longit. #5 BARS @ 12" CTRS., Trans.	
W30	CONT. 2'-6" Wide x 1'-0" Thick	NONE REQUIRED	(3) CONT. #4 BARS, Longit. #5 BARS @ 12" CTRS., Trans.	
W36	CONT. 3'-0" Wide x 1'-0" Thick	NONE REQUIRED	(4) CONT. #5 BARS, Longit. #5 BARS @ 12" CTRS., Trans.	

NOTES:

THE CONTINUOUS WALL FOOTINGS DETAILED IN THIS SCHEDULE ARE BASED ON THE ALLOWABLE SOIL BEARING PRESSURE (q) SPECIFIED ON S0.1 (REFERENCE THE GEOTECHNICAL REPORT FOR ADDITIONAL INFORMATION).

1. FOOTINGS w/ "WXX-*" MARK NUMBERS HAVE BEEN WIDENED TO ACCOMMODATE WALL GEOMETRY (SEE PLAN).

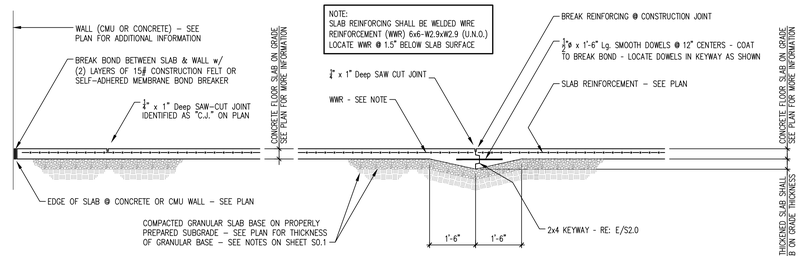

TYPICAL SLAB CONTROL JOINT (C.J.) TYPICAL SLAB CONSTRUCTION JOINT (C.J.)

TYPICAL DETAIL - CONCRETE SLAB JOINTS (A / S2.0)

SCALE: 1/2" = 1'-0"

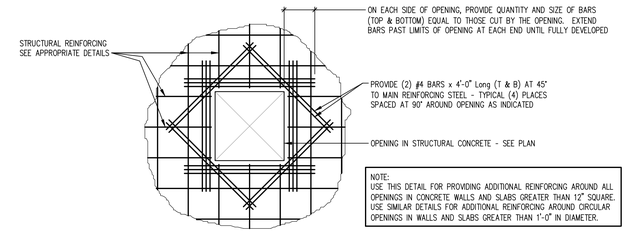

ADDITIONAL REINFORCING AT OPENINGS IN STRUCTURAL CONCRETE

TYPICAL DETAIL (B / S2.0)

SCALE: 1/2" = 1'-0"

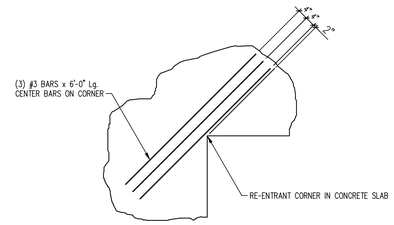

REINFORCING FOR RE-ENTRANT CORNERS IN SLABS

TYPICAL DETAIL (C / S2.0)

SCALE: 1/2" = 1'-0"

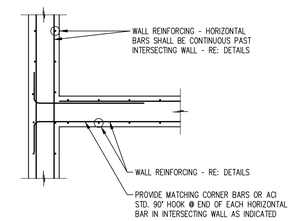

CONCRETE WALL INTERSECTION

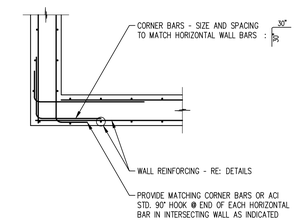

CONCRETE WALL CORNER

TYPICAL DETAIL - CORNER BARS (D / S2.0)

SCALE: 1/2" = 1'-0"

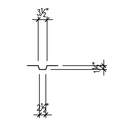

2x4 KEY IN CONCRETE

TYPICAL DETAIL (E / S2.0)

SCALE: 1/2" = 1'-0"

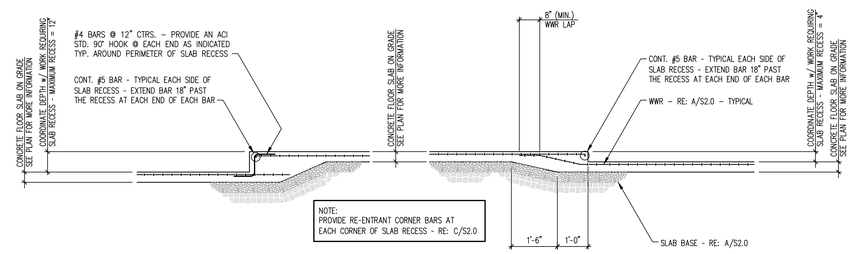

TYPICAL DETAIL - SLAB RECESS (F / S2.0)

SCALE: 1/2" = 1'-0"

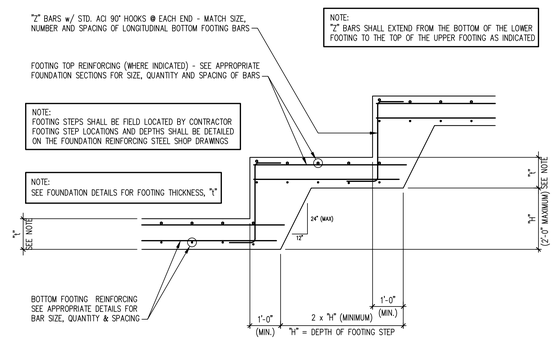

TYPICAL DETAIL - FOOTING STEP (G / S2.0)

SCALE: 1/2" = 1'-0"

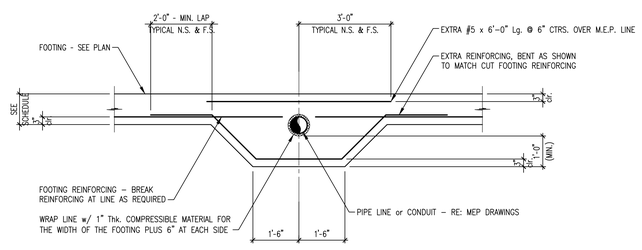

LINE THROUGH FOOTING

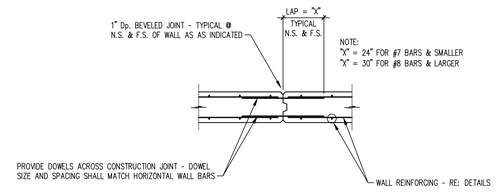

CONSTRUCTION JOINT

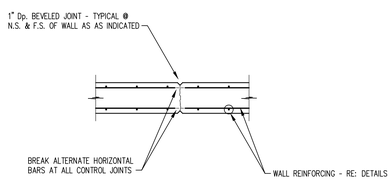

CONTROL JOINT

TYPICAL DETAIL - CONCRETE WALL JOINTS (K / S2.0)

SCALE: 1/2" = 1'-0"

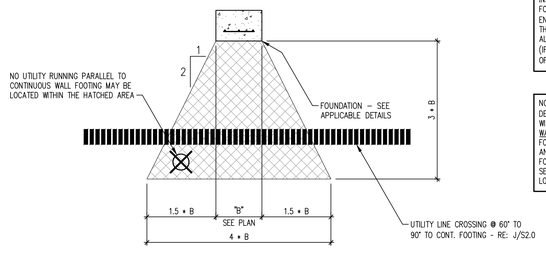

M.E.P. LINE UNDER FOUNDATION WALL / FOOTING

TYPICAL DETAIL - FOUNDATION AT M.E.P. LINES (H / S2.0)

SCALE: 1/2" = 1'-0"

NOTE: THE CONTRACTOR SHALL COORDINATE BETWEEN THE CONCRETE INSTALLER AND THE M.E.P. SUB-CONTRACTOR AND LOWER WALL FOOTINGS AS NECESSARY TO ALLOW UNDERGROUND UTILITIES TO ENTER / EXIT THE BUILDING WITH 6" (MIN.) CLEARANCE BETWEEN THE TOP OF FOOTING AND BOTTOM OF UNDERGROUND UTILITY. ALTERNATIVELY, THE UNDERGROUND UTILITY MAY BE LOWERED (IF ACCEPTABLE TO THE M.E.P. ENGINEER) SUCH THAT THE TOP OF CONDUIT / PIPE IS 12" (MIN.) BELOW BOTTOM OF FOOTING.

NOTE: DETAILS J/S2.0 & H/S2.0 PROVIDE INFORMATION FOR DEALING WITH INTERFERENCES BETWEEN UNDERGROUND M.E.P. LINES AND WALL FOOTINGS - M.E.P. LINES MAY NOT RUN UNDER COLUMN FOOTINGS - WHERE INTERFERENCES BETWEEN COLUMN FOOTINGS AND M.E.P. LINES OCCUR, RE-ROUTE UTILITY OR LOWER COLUMN FOOTING TO ALLOW M.E.P. LINE TO PASS OVER TOP OF FOOTING SEE FOUNDATION DETAILS FOR MORE INFORMATION REGARDING LOWER COLUMN FOOTINGS PER THIS NOTE.

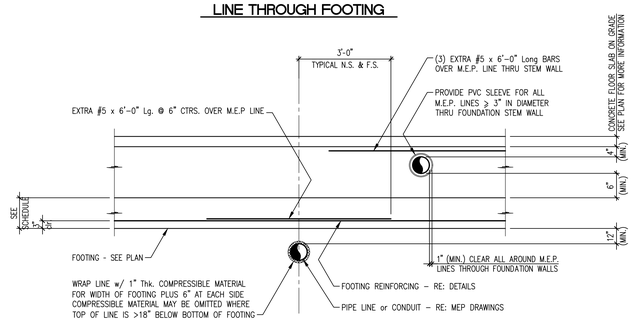

M.E.P. LINE UNDER FOUNDATION WALL / FOOTING

TYPICAL DETAIL - FOUNDATION AT M.E.P. LINES (J / S2.0)

SCALE: 1/2" = 1'-0"

NOTE: INFORMATION AND DETAILS CONTAINED ON THIS SHEET ARE OFFICE STANDARDS - ALL MAY NOT APPLY TO THIS PROJECT

SHERMAN CARTER BARNHART ARCHITECTS

COMMONWEALTH OF KENTUCKY WILLIAM E. GRIGSBY, JR. 16114 LICENSED PROFESSIONAL ENGINEER

NEW SPENCER COUNTY BUS GARAGE

TAYLORSVILLE, KENTUCKY

TYPICAL CONCRETE DETAILS + FOUNDATION SCHEDULES

JOB NO.	1745
DATE	12/16/2019
DRAWN	griggs
CHECKED	WEG/BKL

COPYRIGHT © 2019 SHERMAN CARTER BARNHART ARCHITECTS, PLLC

REVISIONS

No.	Description	Date

SHEET

S2.0

1745
NEW SPENCER COUNTY BUS GARAGE
TAYLORSVILLE, KENTUCKY

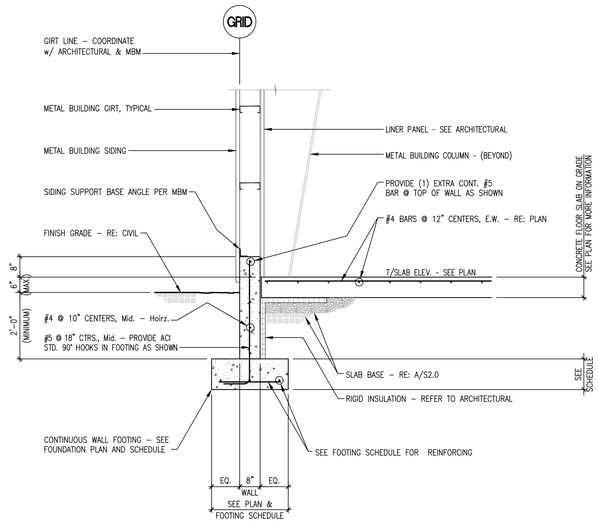

SECTION 1/S2.1
SCALE: 1/2" = 1'-0"

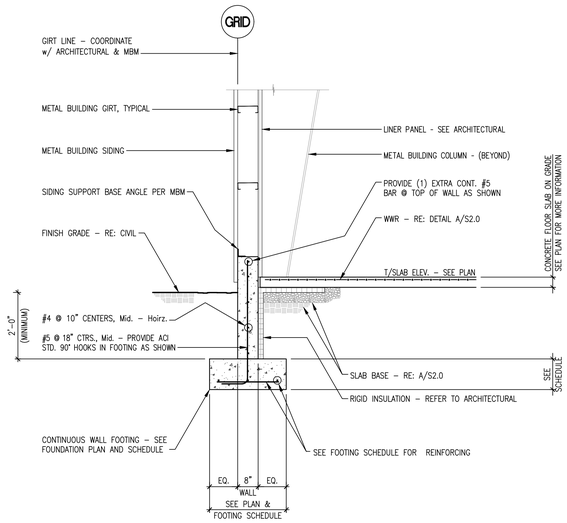

SECTION 2/S2.1
SCALE: 1/2" = 1'-0"

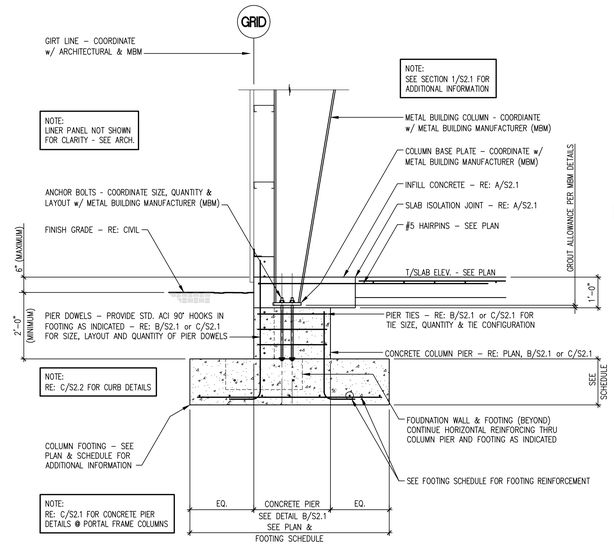

SECTION 3/S2.1
SCALE: 1/2" = 1'-0"

NOTE: WHERE DOOR OPENING IS 3'-0" Wd. OR LESS, (4) CONT. #3 BARS SHALL BE PROVIDED AT EACH SIDE OF WALL

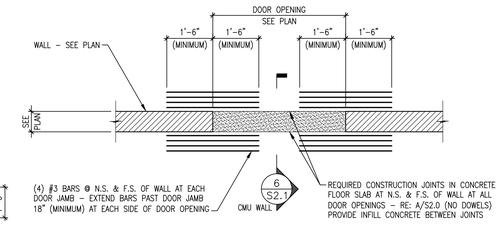

DETAIL A/S2.1
SCALE: 1/2" = 1'-0"

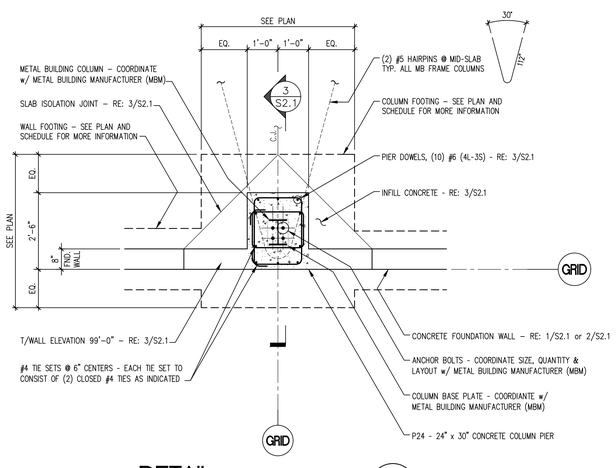

DETAIL B/S2.1
SCALE: 1/2" = 1'-0"

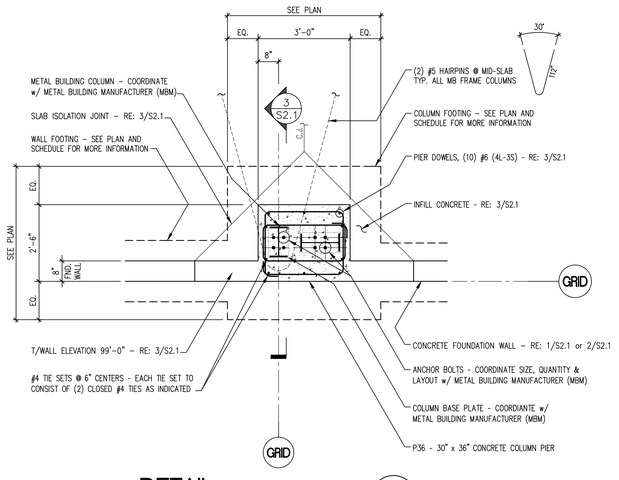

DETAIL C/S2.1
SCALE: 1/2" = 1'-0"

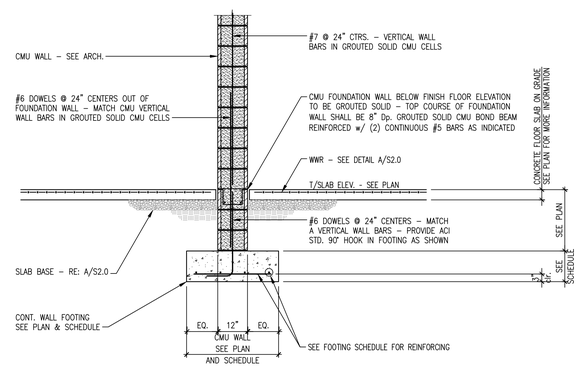

SECTION 4/S2.1
SCALE: 1/2" = 1'-0"

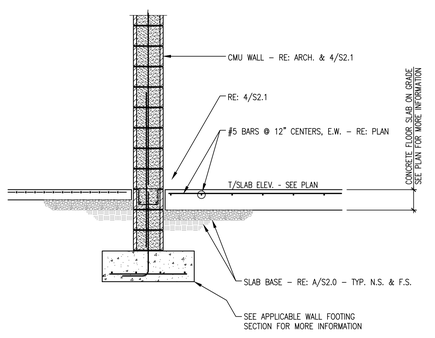

SECTION 5/S2.1
SCALE: 1/2" = 1'-0"

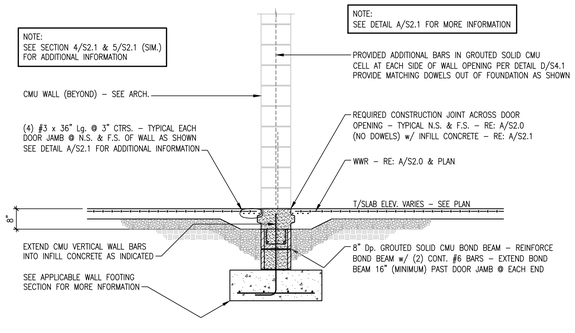

SECTION 6/S2.1
SCALE: 1/2" = 1'-0"

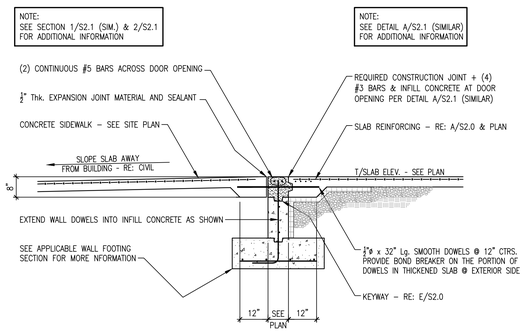

SECTION 7/S2.1
SCALE: 1/2" = 1'-0"

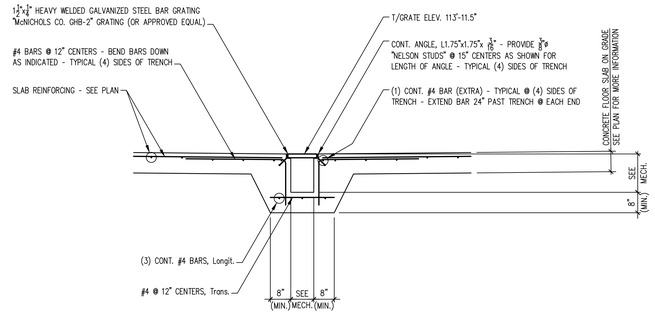

TRENCH DRAIN

TYPICAL DETAIL D/S2.1
SCALE: 1/2" = 1'-0"

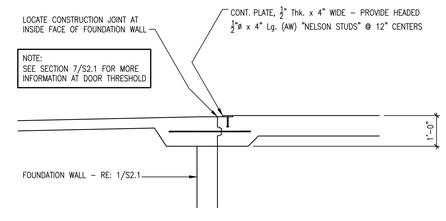

OVERHEAD DOOR SILL

TYPICAL DETAIL E/S2.1
SCALE: 1/2" = 1'-0"

SHERMAN CARTER BARNHART ARCHITECTS

STATE OF KENTUCKY WILLIAM E. GRIGSBY, JR. 16114 LICENSED PROFESSIONAL ENGINEER

NEW SPENCER COUNTY BUS GARAGE
TAYLORSVILLE, KENTUCKY

FOUNDATION SECTIONS and DETAILS

JOB NO.	1745
DATE	12/16/2019
DRAWN	griggs
CHECKED	WEG/BKL

COPYRIGHT © 2019 SHERMAN CARTER BARNHART ARCHITECTS, PLLC

REVISIONS

No.	Description	Date

SHEET

S2.1

1745
NEW SPENCER COUNTY BUS GARAGE
TAYLORSVILLE, KENTUCKY

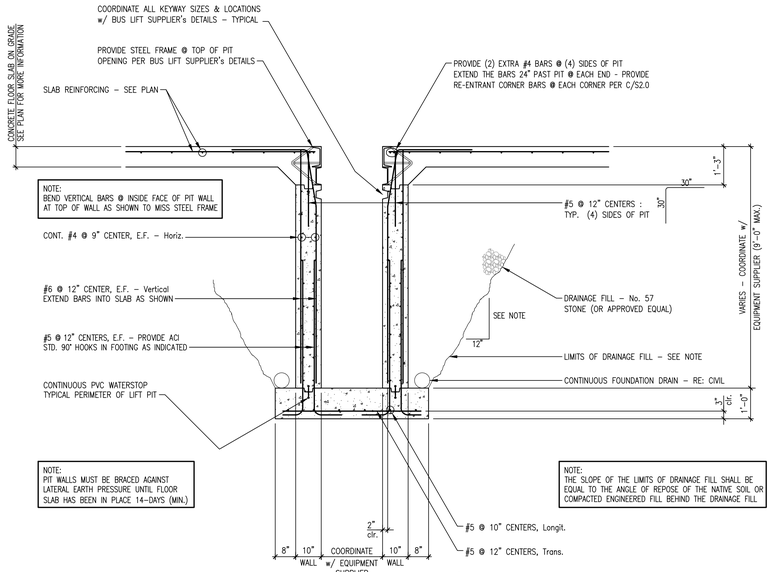

SECTION 1/S2.2
SCALE: 1/2" = 1'-0"

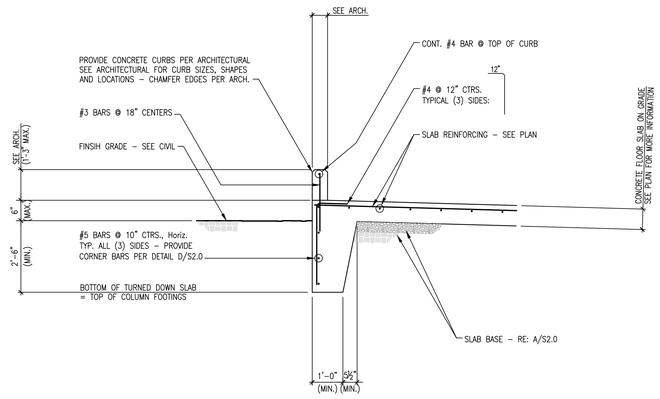

SECTION 2/S2.2
SCALE: 1/2" = 1'-0"

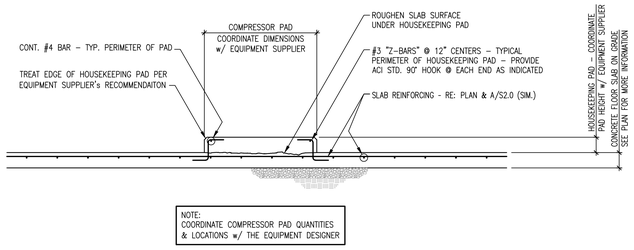

COMPRESSOR PAD

TYPICAL DETAIL A/S2.2
SCALE: 1/2" = 1'-0"

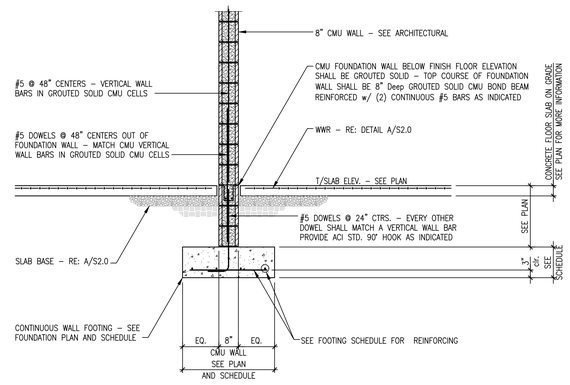

SECTION 3/S2.2
SCALE: 1/2" = 1'-0"

NOTE: AN EXTERIOR WALL FOUNDATION IS SHOWN IN THIS DETAIL FOR CONCEPTIUAL PURPOSES ONLY – THIS DETAIL SHALL APPLY TO ALL CONTINUOUS WALL & ISOLATED COLUMN FOOTINGS ON THIS PROJECT

NOTE: SOFT, YIELDING SOILS, OLD, UNCONTROLLED FILL AND HIGHLY PLASTIC (FAT) CLAYS WERE IDENTIFIED IN THE GEOTECHNICAL REPORT BORING LOGS - FOUNDATIONS MAY NOT BEAR ON THESE OR ANY OTHER DELETERIOUS MATERIAL - IF ANY UNSUITABLE MATERIAL IS ENCOUNTERED AT THE SPECIFIED BOTTOM OF FOOTING ELEVATION (AS DETERMINED IN THE FIELD BY THE GEOTECHNICAL ENGINEER), THE EXCAVATION SHALL BE UNDERCUT TO SUITABLE BEARING MATERIAL - AFTER THE UNDERCUT IS APPROVED BY THE GEOTECHNICAL ENGINEER, THE EXCAVATION SHALL BE BROUGHT TO BEARING ELEVATION WITH SUITABLE, COMPACTED, STRUCTURAL SOIL (LEAN CLAY) FILL FILL - "D" IS THE DEPTH OF UNDERCUT TO SUITABLE BEARING MATERIAL (AS DETERMINED IN THE FIELD BY THE GEOTECHNICAL ENGINEER) - IN THE CASE OF FAT CLAYS THE UNDERCUT SHALL BE A MINIMUM OF 24" - THE GEOTECHNICAL ENGINEER SHALL DIRECT AND DOCUMENT ALL UNDERCUTTING AND BACKFILLING OPERATIONS

NOTE: STRUCTURAL FILL MATERIAL SHALL BE CLEAN SOIL FILL (SUCH AS LEAN CLAY) OR DENSE GRADE AGGREGATE (DGA) - FILL SHALL BE PLACED IN 8" (MAX.) LOOSE LIFTS & COMPACTED TO 100% (MIN.) OF STANDARD PROCTOR DENSITY (ASTM D-698) AT A MOISTURE CONTENT WITHIN 2% OF OPTIMUM ALL FILL MATERIAL SELECTION, AS WELL AS PLACEMENT & COMPACTION OF FILL, SHALL BE DIRECTED AND DOCUMENTED BY THE GEOTECHNICAL ENGINEER.

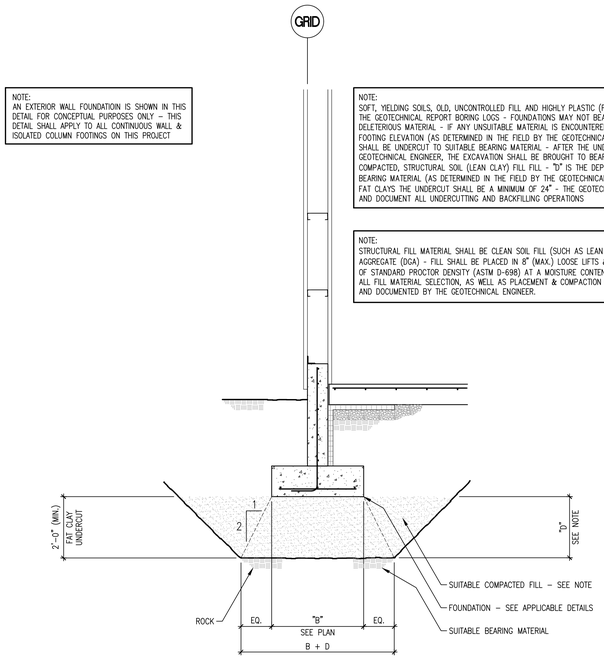

FOUNDATION UNDERCUT

DETAIL B/S2.2
SCALE: 1/2" = 1'-0"

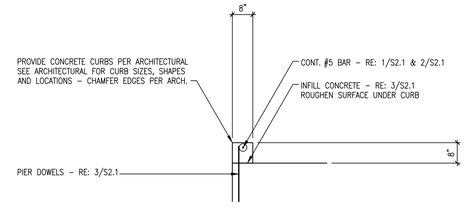

CONCRETE CURB

DETAIL C/S2.2
SCALE: 1/2" = 1'-0"

SHERMAN CARTER BARNHART ARCHITECTS

COMMONWEALTH OF KENTUCKY WILLIAM E. GRIGSBY, JR. 16114 LICENSED PROFESSIONAL ENGINEER

NEW SPENCER COUNTY BUS GARAGE

TAYLORSVILLE, KENTUCKY

FOUNDATION SECTIONS and DETAILS

JOB NO.	1745
DATE	12/16/2019
DRAWN	griggs
CHECKED	WEG/BKL

COPYRIGHT © 2019 SHERMAN CARTER BARNHART ARCHITECTS, PLLC

REVISIONS

No.	Description	Date

SHEET

S2.2

1745
NEW SPENCER COUNTY BUS GARAGE
TAYLORSVILLE, KENTUCKY

STEEL BEAM SCHEDULE

BEAM MARK No.	BEAM SIZE	BEAM MATERIAL	DESIGN REACTION	BEAM CONNECTION DETAIL		BEAM BEARING PLATE		BEAM ELEVATION		SECTION	REMARKS	BEAM MARK No.
				TAG END	OPPOSITE END	TAG	OPP.	TAG END	OPPOSITE END			
B01	W16x31	A992, Gr. 50	6.0 kips	A/S5.1 (SIM.)	A/S5.1 (SIM.)	N/A	N/A	109'-4"	109'-4"	RE: 4/S5.1		B01
B02	W12x22	A992, Gr. 50	12.1 kips	A/S5.1	A/S5.1	N/A	N/A	109'-7"	109'-7"	RE: 3/S5.1		B02
B03	W12x22	A992, Gr. 50	12.1 kips	A/S5.1	A/S5.1	N/A	N/A	109'-7"	109'-7"	RE: 3/S5.1		B03
B04	W18x35	A992, Gr. 50	28.2 kips	A/S5.1	A/S5.1	N/A	N/A	109'-7"	109'-7"	RE: 3/S5.1		B04
B05	W16x45	A992, Gr. 50	31.0 kips	B/S5.1	B/S5.1	N/A	N/A	109'-4"	109'-4"	RE: 5/S5.1		B05

BEAM SCHEDULE NOTES:

1. "TAG END" REFERS TO THE END OF THE BEAM WITH THE BEAM MARK NUMBER ON THE PLAN.
2. BEAMS MAY BE FABRICATED USING MATERIAL CONFORMING TO ASTM SPECIFICATION A992, GRADE 50 IN LIEU OF THE MATERIAL SPECIFIED AT THE FABRICATOR's OPTION. IT SHALL BE NOTED ON THE SHOP DRAWINGS IF THIS OPTION IS EXERCISED.
3. THE DETAILER SHALL INDICATE THE APPROPRIATE BEAM MARK NUMBERS FROM THESE DRAWINGS ON EACH BEAM DETAIL IN THE SHOP DRAWINGS. FAILURE TO COMPLY WITH REQUIREMENT WILL RESULT IN REJECTION OF THE SHOP DRAWING SUBMITTAL.
4. THE ELEVATIONS SHOWN HEREIN ARE THE TOP OF STEEL ELEVATIONS (U.N.O.) AT THE INTERSECTION OF CENTER LINES OF THE BEAM UNDER CONSIDERATION AND THE BEAM OR COLUMN INTO WHICH THAT BEAM FRAMES. WHERE BEAM ELEVATION IS MARKED WITH A (B), THE SPECIFIED ELEVATION IS THE BOTTOM OF STEEL ELEVATION.
5. THE COLUMN IN THE SCHEDULE IDENTIFIED AS "SECTION" REFERENCES (RE:) APPLICABLE SECTIONS AND DETAILS THROUGH THE BEAM.

MEZZANINE BEAM LOAD TO METAL BUILDING COLUMNS

BEAM MARK No.	2nd FLOOR	REMARKS
B01	13.8 k - L 5.5 k - D	
B02	2.2 k - L 2.0 k - D	
B03	2.2 k - L 2.0 k - D	
B04	5.1 k - L 2.3 k - D	
B05	22.4 k - L 8.6 k - D	
	k - L k - D	
	k - L k - D	
	k - L k - D	
	k - L k - D	
	k - L k - D	

NOTES:

1. THE METAL BUILDING SUPPLIER SHALL INCLUDE THE FORCES INDICATED IN THIS SCHEDULE AND ON DETAIL A/S3.0 IN THE METAL BUILDING DESIGN.

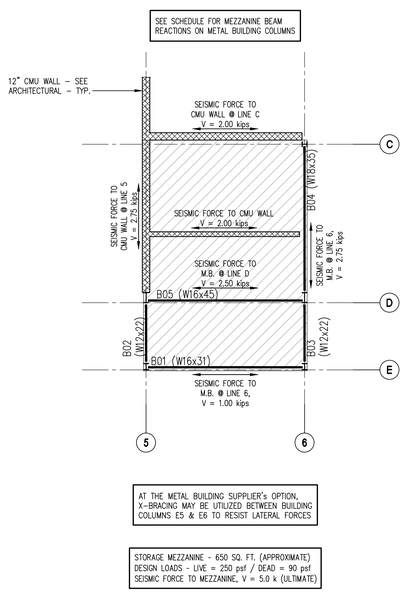

SEISMIC FORCES TO M.B. FRAME DUE TO MEZZANINE

DETAIL A S3.0
SCALE: 1/8" = 1'-0"

METAL BUILDING COLUMN LOAD SCHEDULE

MB MARK No.	ROOF	2nd FLOOR	UPLIFT	2nd FLOOR SEISMIC	REMARKS
A1	2.2 k - L 3.3 k - D	0.0 k - L 0.0 k - D	3.6 kips		
A2 + A5	4.3 k - L 6.5 k - D	0.0 k - L 0.0 k - D	5.1 kips		
A3 + A4	4.3 k - L 6.5 k - D	0.0 k - L 0.0 k - D	14.2 kips		PORTAL FRAME COLUMNS
A6	2.2 k - L 3.3 k - D	0.0 k - L 0.0 k - D	5.1 kips		
B1 + C1	4.3 k - L 6.5 k - D	0.0 k - L 0.0 k - D	10.2 kips		WIND COLUMN
B2 + C2	12.9 k - L 19.3 k - D	0.0 k - L 0.0 k - D	7.6 kips		WIND COLUMN
B6	4.3 k - L 6.5 k - D	0.0 k - L 0.0 k - D	7.3 kips		WIND COLUMN
C6	4.3 k - L 6.5 k - D	5.1 k - L 2.3 k - D	7.3 kips	RE: A/S3.0	WIND COLUMN
D1	2.2 k - L 3.3 k - D	0.0 k - L 0.0 k - D	3.6 kips		
D2	4.3 k - L 6.5 k - D	0.0 k - L 0.0 k - D	5.1 kips		
D3 + D4	4.3 k - L 6.5 k - D	0.0 k - L 0.0 k - D	14.2 kips		PORTAL FRAME COLUMNS
D5	5.2 k - L 7.8 k - D	24.6 k - L 9.6 k - D	6.1 kips	RE: A/S3.0	
D6	3.1 k - L 4.6 k - D	29.7 k - L 11.9 k - D	5.2 kips	RE: A/S3.0	
E5 + E6	1.5 k - L 2.0 k - D	16.0 k - L 6.5 k - D	3.2 kips	RE: A/S3.0	BRACED FRAME COLUMNS
	k - L k - D	k - L k - D	kips		
	k - L k - D	k - L k - D	kips		
	k - L k - D	k - L k - D	kips		
	k - L k - D	k - L k - D	kips		
	k - L k - D	k - L k - D	kips		
	k - L k - D	k - L k - D	kips		
	k - L k - D	k - L k - D	kips		
	k - L k - D	k - L k - D	kips		
	k - L k - D	k - L k - D	kips		
	k - L k - D	k - L k - D	kips		
	k - L k - D	k - L k - D	kips		
	k - L k - D	k - L k - D	kips		
	k - L k - D	k - L k - D	kips		
	k - L k - D	k - L k - D	kips		

NOTES:

1. FOUNDATIONS HAVE BEEN DESIGNED FOR LOADS IN THIS SCHEDULE. NO COLUMN BASE MOMENTS WERE CONSIDERED IN THE FOUNDATION DESIGN AND NONE ARE PERMITTED WITHOUT PRIOR WRITTEN APPROVAL FROM THE STRUCTURAL ENGINEER.
2. SHOP DRAWINGS SHALL CLEARLY INDICATE COLUMN BASE REACTIONS FOR ALL CODE REQUIRED LOAD COMBINATIONS. CONSTRUCTION OF THE FOUNDATIONS SHALL NOT BEGIN UNTIL THE STRUCTURAL ENGINEER HAS REVIEWED COLUMN BASE REACTIONS AND VERIFIED THE FOUNDATION DESIGN.
3. X-BRACING IS PERMITTED BETWEEN COLUMNS D5 & D6 ONLY. ALL LATERAL LOADS (WIND & SEISMIC) WILL BE RESISTED BY THE BUILDING LATERAL FORCE RESISTING SYSTEM. PORTAL FRAME LOCATIONS SHOWN ON THE PLANS ARE FOR CONCEPTUAL PURPOSES ONLY. THE CONTRACTOR SHALL BE RESPONSIBLE FOR COORDINATING ACTUAL PORTAL FRAME REQUIREMENTS BETWEEN THE METAL BUILDING MANUFACTURER (MBM) AND THE ARCHITECT.
4. THE LISTED SEISMIC LOADS ARE DUE TO THE DEAD LOAD OF THE SECOND FLOOR STRUCTURE ONLY. THE METAL BUILDING DESIGNER SHALL INCLUDE THE SEISMIC LOADS LISTED IN THIS CHART IN THE DESIGN OF THE METAL BUILDING FRAMES.
5. THE METAL BUILDING DESIGNER IS RESPONSIBLE FOR CALCULATING SEISMIC LOAD DUE TO METAL BUILDING WEIGHT AS WELL AS WIND LOADS.

SHERMAN CARTER BARNHART ARCHITECTS

COMMONWEALTH OF KENTUCKY
WILLIAM E. GRIGSBY, JR.
16114
LICENSED PROFESSIONAL ENGINEER

NEW SPENCER COUNTY BUS GARAGE
TAYLORSVILLE, KENTUCKY

METAL BUILDING COLUMN LOAD SCHEDULE
STEEL BEAM SCHEDULE

JOB NO.	1745
DATE	12/16/2019
DRAWN	griggs, DEM
CHECKED	WEG/BKL

COPYRIGHT © 2019
SHERMAN CARTER BARNHART
ARCHITECTS, PLLC

REVISIONS

No.	Description	Date

SHEET
S3.0

1745
NEW SPENCER COUNTY BUS GARAGE
TAYLORSVILLE, KENTUCKY

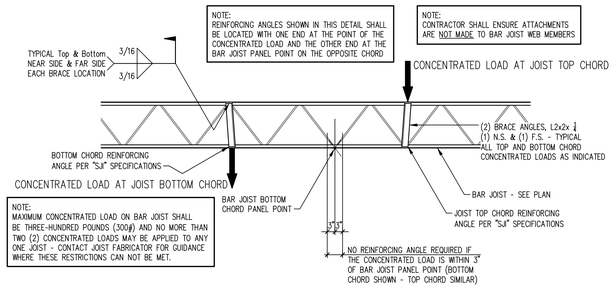

REINFORCING FOR BAR JOIST CHORDS UNDER CONCENTRATED LOADS

TYPICAL DETAIL (A / S3.1)

SCALE: 1/2" = 1'-0"

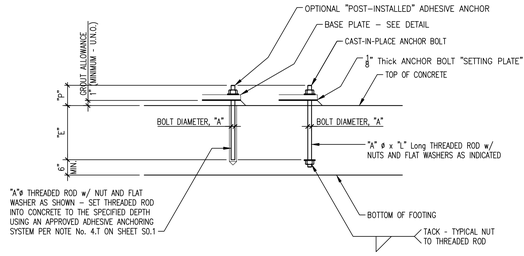

ANCHOR BOLTS

TYPICAL DETAIL (B / S3.1)

SCALE: 1/2" = 1'-0"

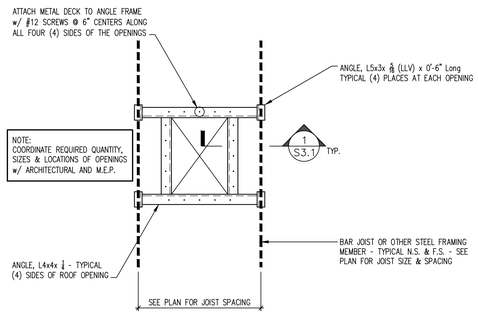

ANGLE FRAME FOR OPENINGS IN ROOF DECK + FORM DECK

TYPICAL DETAIL (C / S3.1)

SCALE: 1/2" = 1'-0"

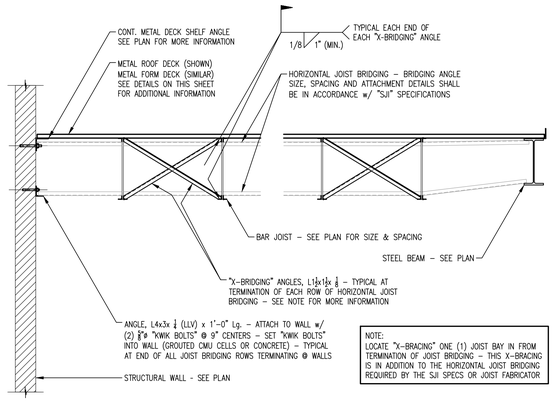

JOIST BRIDGING TERMINATION DETAIL

TYPICAL DETAIL (D / S3.1)

SCALE: 1/2" = 1'-0"

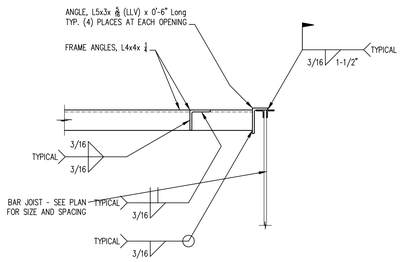

SECTION (1 / S3.1)

SCALE: 1" = 1'-0"

ANCHOR BOLT SCHEDULE

"A"	"E"(2)	"P"	"L"	THREADED ROD MATERIAL	REMARKS
1/2"	7"	3 1/2"	14"	ASTM F1554, Gr. 36	
5/8"	12"	3 1/2"	18"	ASTM F1554, Gr. 36	
3/4"	15"	4"	21"	ASTM F1554, Gr. 36	
1"	18"	4 1/2"	25"	ASTM F1554, Gr. 55	
1 1/4"	21"	5"	29"	ASTM F1554, Gr. 55	
1 3/8"	24"	5"	32"	ASTM F1554, Gr. 55	
1 1/2"	24"	5"	32"	ASTM F1554, Gr. 55	
2"	30"	8"	42"	ASTM F1554, Gr. 55	

NOTE:

1. POST INSTALLED, ADHESIVE ANCHORS MAY BE USED IN LIEU OF CAST IN PLACE, HEADED ANCHORS AT CONTRACTOR's OPTION. SEE NOTE 4.T ON SHEET S0.1 FOR ADDITIONAL INFORMATION.

(2) EMBEDMENT DEPTH "E" FOR POST INSTALLED ADHESIVE ANCHORS MAY BE REDUCED TO THAT DEPTH SPECIFIED BY THE ADHESIVE MANUFACTURER WHICH DEVELOPS THE FULL YIELD STRENGTH OF THE THREADED ROD FOR THE DIAMETER AND GRADE IN QUESTION.

★3. WHERE THE SPECIFIED EMBEDMENT DEPTH "E" CAN NOT BE ACHIEVED DUE TO THE CONSTRAINTS OF THE CONCRETE FOOTING THICKNESS, THE EMBEDMENT DEPTH SHALL BE SHORTENED AS REQUIRED TO MAINTAIN THE CLEARANCE INDICATED IN THIS DETAIL.

4. HARDENED FLAT WASHERS SHALL MEET THE REQUIREMENTS OF MATERIAL SPECIFICATION ASTM F436 . NUTS SHALL MEET THE REQUIREMENTS OF MATERIAL SPECIFICATION ASTM A563, Gr. A HEX FOR ANCHOR BOLTS 1 1/2"ø AND SMALLER AND A563, Gr. DH HEAVY HEX FOR ANCHOR BOLTS LARGER THAN 1 1/2"ø. WHEN A563, Gr. DH NUTS ARE NOT AVAILABLE, A194, Gr.2H NUTS MAY BE SUBSTITUTED.

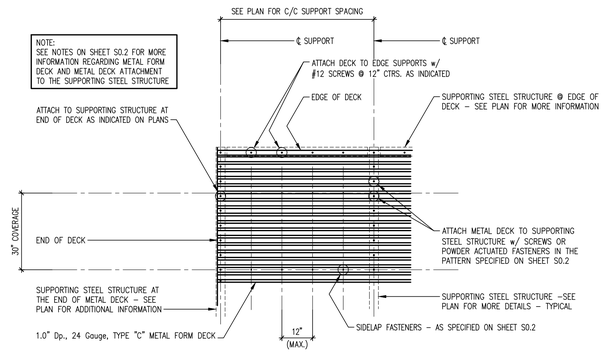

1.0C METAL FORM DECK FASTENER PATTERN

TYPICAL DETAIL (E / S3.1)

SCALE: 1/2" = 1'-0"

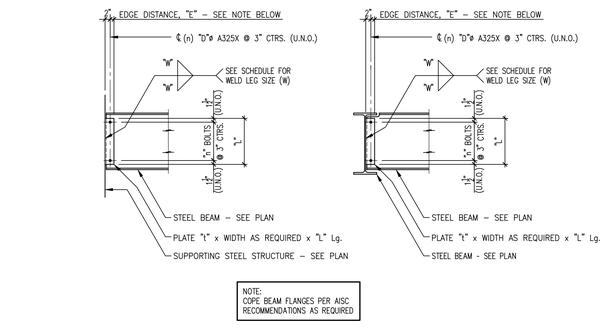

TYPICAL SHEAR TAB

SHEAR TAB TO BEAM WEB

NOTE:
THE HORIZONTAL EDGE DISTANCE, "E" SHALL BE TWO (2) TIMES THE BOLT DIAMETER, "D"

SINGLE-PLATE (SHEAR TAB) BEAM CONNECTION

TYPICAL DETAIL (F / S3.1)

SCALE: 1/2" = 1'-0"

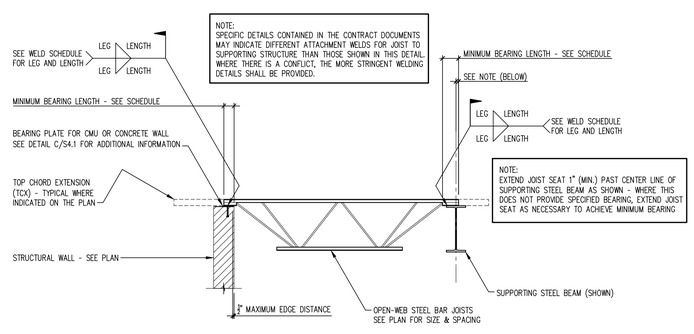

JOIST TO SUPPORTING STRUCTURE ATTACHMENT DETAIL

TYPICAL DETAIL (G / S3.1)

SCALE: 1/2" = 1'-0"

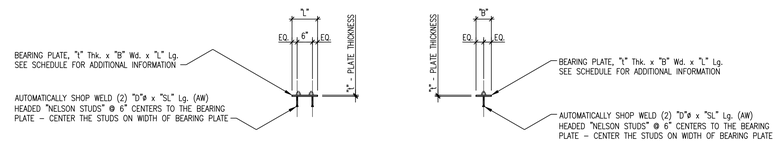

BAR JOIST BEARING PLATES

TYPICAL DETAIL (H / S3.1)

SCALE: 1/2" = 1'-0"

STEEL BEAM CONNECTION SCHEDULE

BEAM SIZE	"t"	"n"	"L"	"W"	"D"	DESIGN REACTION	REMARKS
W12x22	5/16"	3	9.0"	1/4"	3/4"ø	25.0 kips	
W16x36	3/8"	4	12.0"	1/4"	3/4"ø	45.0 kips	
W16x45	1/2"	4	12.0"	5/16"	3/4"ø	60.0 kips	
W18x35	3/8"	5	15.0"	1/4"	3/4"ø	50.0 kips	

NOTES:

1. THIS SCHEDULE ASSUMES ALL CONNECTION BOLTS TO BE A325X (U.N.O.) INSTALLED "SNUG-TIGHT" (U.N.O.)

2. THIS SCHEDULE AND ACCOMPANYING DETAILS ARE BASED ON THE "SINGLE-PLATE CONNECTIONS TABLES" IN THE "AISC MANUAL OF STEEL CONSTRUCTION" (CURRENT EDITION). FOR DEFINITION OF DIMENSIONS AND OTHER TERMS CONTAINED IN THIS SCHEDULE SEE DETAIL B/S3.1

3. CAPACITIES ASSUME BEAMS ARE NOT COPED. CAPACITIES MUST BE REDUCED PER AISC SPECIFICATIONS FOR BEAMS WITH COPED FLANGES.

4. FOR SINGLE-PLATE CONNECTIONS ON SKEWED BEAMS WHERE THE SKEW OF THE SHEAR TAB RESTRICTS INSTALLATION OF CONNECTION BOLTS, THE 2" DIMENSION MAY BE INCREASED TO 3 1/2" (MAX.) TO ALLOW BOLT INSTALLATION.

5. TO ACCOMMODATE ERECTION TOLERANCES, THE BOLT HOLES MAY BE HORIZONTAL "SHORT SLOTTED HOLES".

6. ANY BEAM SHOWN ON PLAN FRAMING INTO ANOTHER STEEL ELEMENT (BEAM OR COLUMN) THAT IS NOT SHOWN IN THIS SCHEDULE SHALL HAVE A CONNECTION DETAILED IN ACCORDANCE WITH THIS SCHEDULE. SHEAR TAB SHALL BE SIZED FOR A BEAM SHOWN IN THIS SCHEDULE THAT IS FROM THE SAME "BEAM FAMILY" AS THE BEAM IN QUESTION.

JOIST WELD SCHEDULE

JOIST SERIES	LEG	LENGTH	BEARING LENGTH	REMARKS
"K" SERIES	1/8"	3"	4" CMU - 2 1/2" STEEL	RE: ANSI SJI-K-2010

THIS DETAIL IS BASED ON THE SPECIFICATIONS OF THE STEEL JOIST INSTITUTE (SJI).
BEARING LENGTHS SPECIFIED IN THIS TABLE DO NOT INCLUDE ANY REQUIRED JOIST TOP CHORD EXTENSION (TCX).
ALL JOIST SERIES SHOWN IN THIS CHART MAY NOT APPLY TO THIS PROJECT. SEE PLANS FOR SPECIFIC JOISTS REQUIRED.

BEARING PLATE SCHEDULE

SUPPORTED STRUCTURAL MEMBER	"t"	"B"	"L"	"D"	"SL"	REMARKS
"K-SERIES" STEEL BAR JOIST	3/8"	4"	10"	3/8"	4"	

SHERMAN CARTER BARNHART ARCHITECTS

COMMONWEALTH OF KENTUCKY
WILLIAM E. GRIGSBY, JR.
16114
LICENSED PROFESSIONAL ENGINEER

NEW SPENCER COUNTY BUS GARAGE

TAYLORSVILLE, KENTUCKY

TYPICAL STEEL FRAMING DETAILS

JOB NO.	1745
DATE	12/16/2019
DRAWN	griggs, DEM
CHECKED	WEG/BKL

COPYRIGHT © 2019
SHERMAN CARTER BARNHART ARCHITECTS, PLLC

REVISIONS

No.	Description	Date

SHEET

S3.1

1745
NEW SPENCER COUNTY BUS GARAGE
TAYLORSVILLE, KENTUCKY

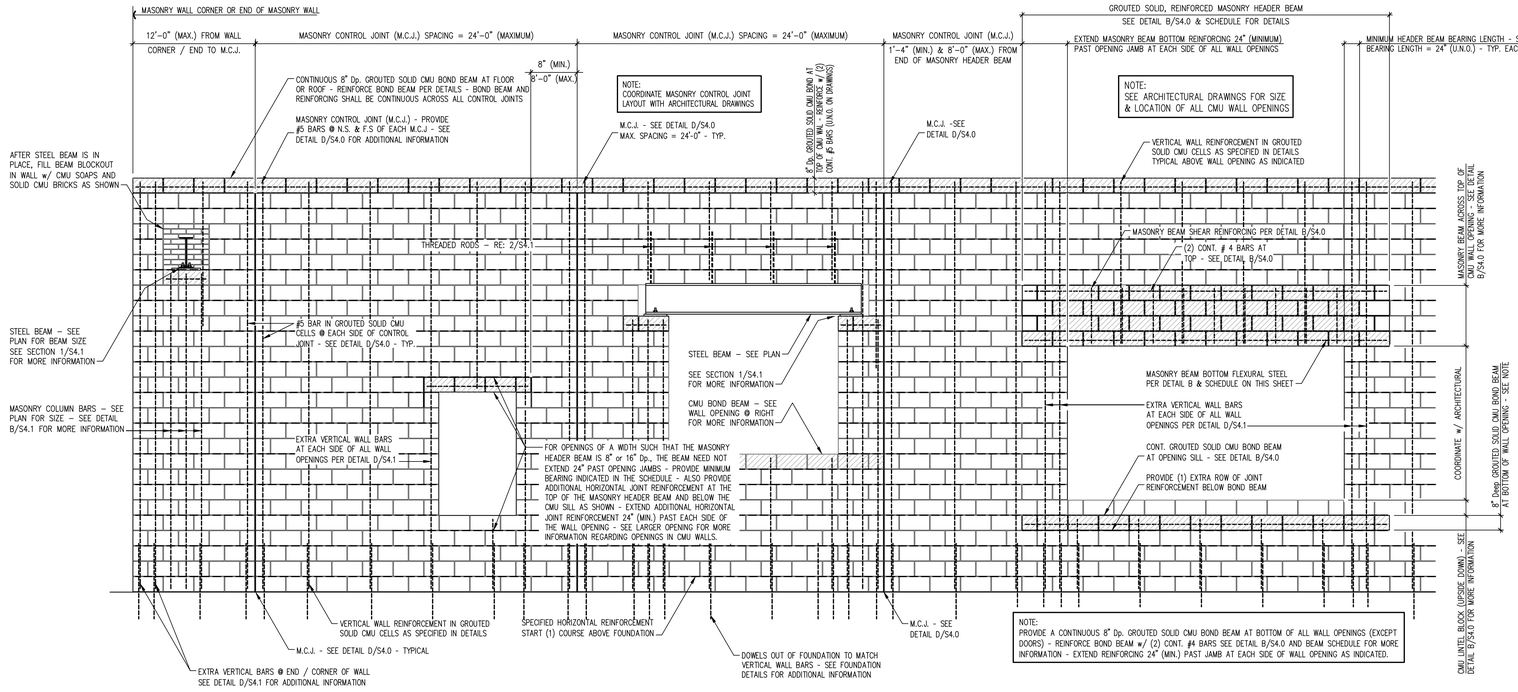

MASONRY (CMU) WALL OPENINGS, JOINTS + REINFORCING

TYPICAL DETAIL (A / S4.0)

SCALE: NONE

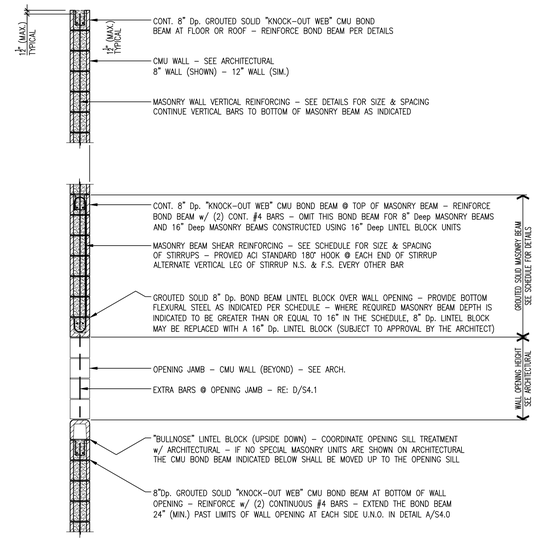

TYPICAL DETAIL (B / S4.0)

SCALE: 1/2" = 1'-0"

NOTE:
INFORMATION AND DETAILS CONTAINED ON THIS SHEET ARE OFFICE STANDARDS - ALL MAY NOT APPLY TO THIS PROJECT.

● DENOTES AN ACCEPTABLE KWIK BOLT INSTALLATION LOCATION

⊗ DENOTES AN UNACCEPTABLE KWIK BOLT INSTALLATION LOCATION

NOTE:
USE OF TERM "KWIK BOLT" IN THIS DETAIL REFERS TO VARIOUS POST-INSTALLED ANCHORS (i.e. EXPANSION, EPOXY & CONCRETE SCREW ANCHORS) - RE: NOTES 4.T, 4.U, 4.V & 4.W ON S0.1
RE: S0.3 FOR REQUIRED POST-INSTALLED ANCHOR INSPECTIONS

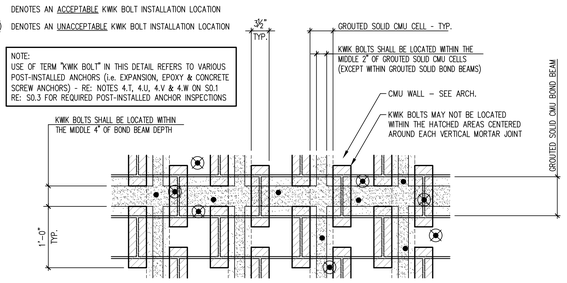

ALLOWED INSTALLATION LOCATION FOR POST INSTALL ANCHOR BOLTS
(KWIK BOLTS AND EPOXY ANCHORS)

TYPICAL DETAIL (G / S4.0)

SCALE: 1/2" = 1'-0"

MASONRY HEADER BEAM SCHEDULE

WALL OPENING MARK No. (1)	OPENING WIDTH	CMU WALL THICKNESS	CMU HEADER BEAM DEPTH	CMU HEADER BEAM LOAD	CMU BOND BEAM FLEXURAL REINFORCING	CMU BOND BEAM SHEAR REINFORCING	MINIMUM BEARING LENGTH	REMARKS
A	3'-4"	12"	16"		(2) #5	NONE REQUIRED	24"	INTERIOR DOOR
B	6'-4"	12"	24"		(2) #5	NONE REQUIRED	24"	INTERIOR DOUBLE DOOR
C	2'-8"	12"	16"		(2) #5	NONE REQUIRED	24"	MEZZANINE ACCESS PANEL

MASONRY HEADER BEAM SCHEDULE NOTES:

1. WALL OPENING MARK NUMBERS ARE IDENTIFIED IN HEXAGONS ON THE FRAMING PLANS FOR THE PLAN DIRECTLY ABOVE THE OPENING.
2. AT CONTRACTOR's OPTION, THE CMU BOND BEAM HEADER OVER WALL OPENINGS MAY BE REPLACED WITH A STEEL BEAM (+ PLATE TO CARRY CMU SOAPS AND / OR BRICK VENEER). CONTACT THE STRUCTURAL ENGINEER FOR STEEL BEAM SIZE. BEAM SHALL BE SUPPORTED AT EACH END PER SECTION 1/S4.1. CONSTRUCT CMU WALL ABOVE STEEL BEAM AND PROVIDE STEEL PLATE PER SECTION 2/S4.1.
3. ALL STEEL LINTEL ANGLES & STEEL BEAMS (+ PLATE) SHALL BE HOT-DIPPED GALVANIZED.
4. WHERE MASONRY OPENINGS ARE SHOWN ON ARCHITECTRUAL DRAWINGS BUT NOT INDICATED ON STRUCTURAL DRAWINGS (e.g. PARTITIOIN WALLS & NON-BEARING WALLS), THE MASON SHALL PROVIDE A REINFORCED CMU HEADER BEAM DETAILED PER THIS SCHEDULE USING THE OPENING THAT MOST CLOSELY RESEMBLES MASONRY OPENING IN QUESTION.

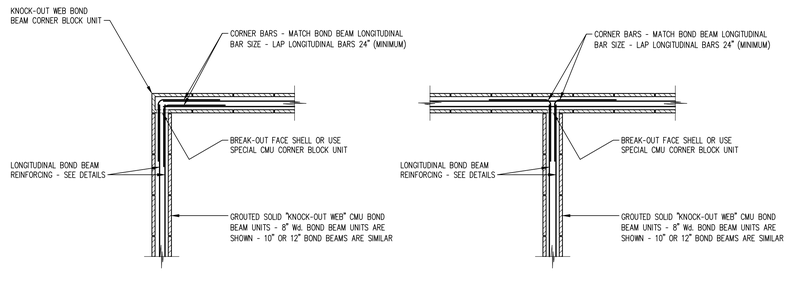

CMU WALL CORNER

CMU WALL INTERSECTION

TYPICAL DETAIL - CMU BOND BEAM CORNER BARS (C / S4.0)

SCALE: 1/2" = 1'-0"

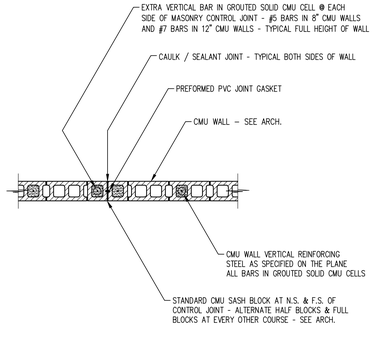

MASONRY CONTROL JOINT (M.C.J.)

TYPICAL DETAIL (D / S4.0)

SCALE: 1/2" = 1'-0"

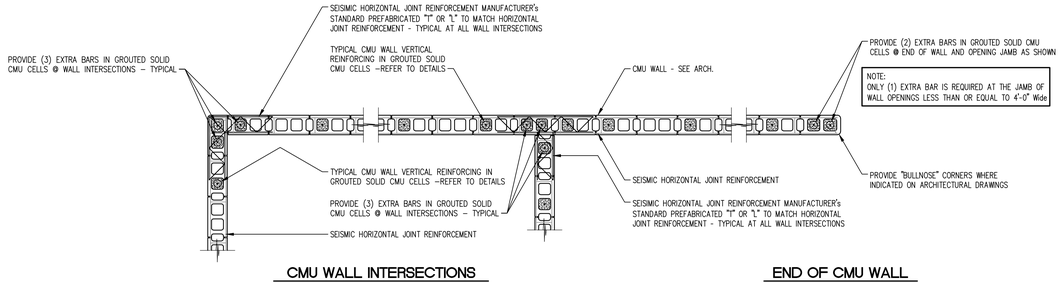

CMU WALL INTERSECTIONS

END OF CMU WALL

NOTE:
THIS DETAIL SHOWS EXTRA VERTICAL BARS REQUIRED FOR CMU WALLS AT INTERSECTIONS, CORNERS AND ENDS OF WALLS
8" CMU WALLS ARE SHOWN - 12" CMU WALLS ARE SIMILAR - THE SIZE OF THE EXTRA BARS SHALL MATCH VERTICAL WALL BARS SPECIFIED FOR THE CMU WALL IN QUESTION - CMU WALL VERTICAL BARS SHALL BE CENTERED IN GROUTED SOLID CMU CELLS - PROVIDE FULLY DEVELOPED MATCHING DOWELS OUT OF THE FOUNDATION FOR ALL VERTICAL BARS IN CMU WALLS

TYPICAL DETAIL - CMU WALL REINFORCING (E / S4.0)

SCALE: 1/2" = 1'-0"

SHERMAN CARTER BARNHART ARCHITECTS

STATE OF KENTUCKY WILLIAM E. GRIGSBY, JR. 16114 LICENSED PROFESSIONAL ENGINEER

NEW SPENCER COUNTY BUS GARAGE

TAYLORSVILLE, KENTUCKY

MASONRY HEADER BEAM SCHEDULE
TYPICAL MASONRY DETAILS

JOB NO.	1745
DATE	12/16/2019
DRAWN	griggs, DEM
CHECKED	WEG/BKL

COPYRIGHT © 2019 SHERMAN CARTER BARNHART ARCHITECTS, PLLC

REVISIONS

No.	Description	Date

SHEET

S4.0

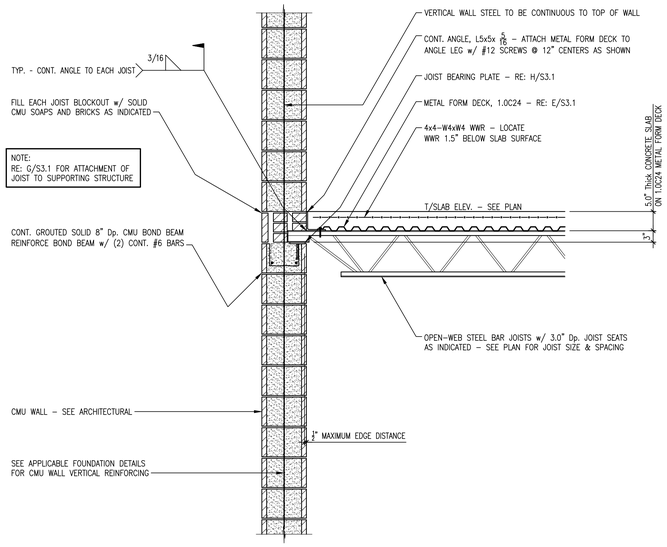

SECTION 1 / S5.1
SCALE: 3/4" = 1'-0"

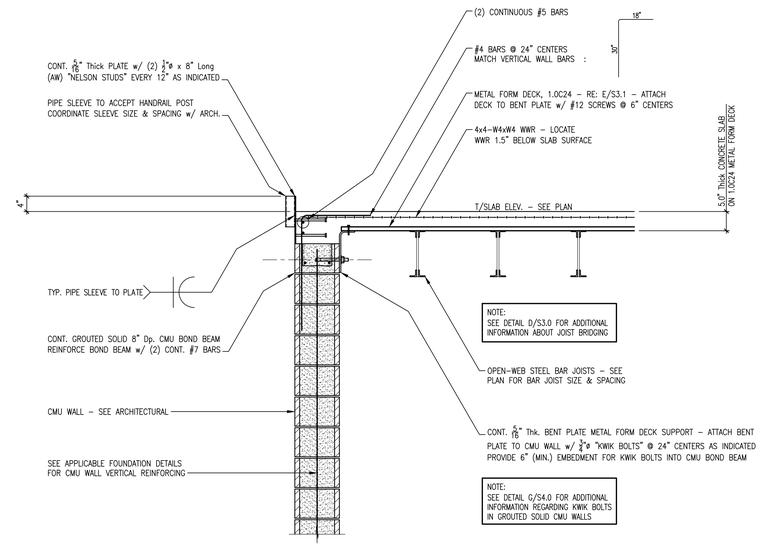

SECTION 2 / S5.1
SCALE: 3/4" = 1'-0"

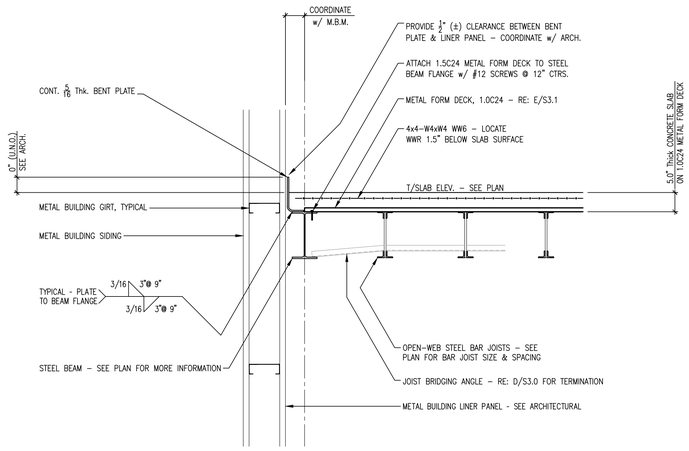

SECTION 3 / S5.1
SCALE: 3/4" = 1'-0"

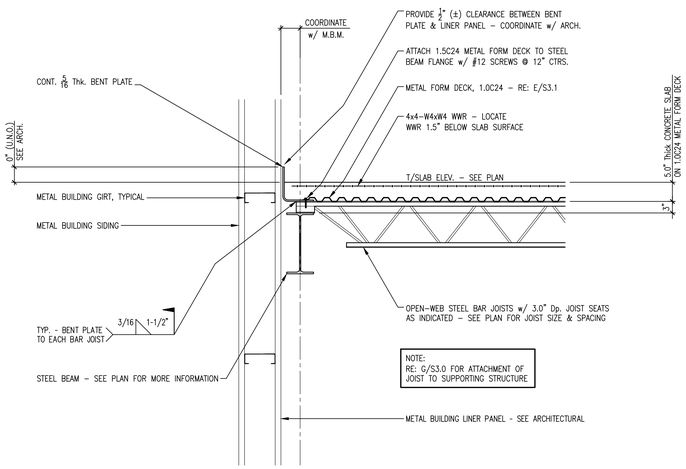

SECTION 4 / S5.1
SCALE: 3/4" = 1'-0"

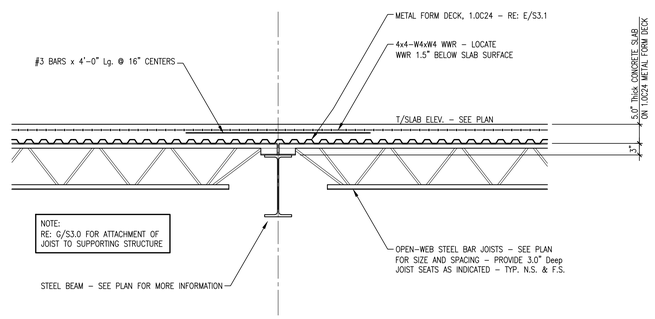

SECTION 5 / S5.1
SCALE: 3/4" = 1'-0"

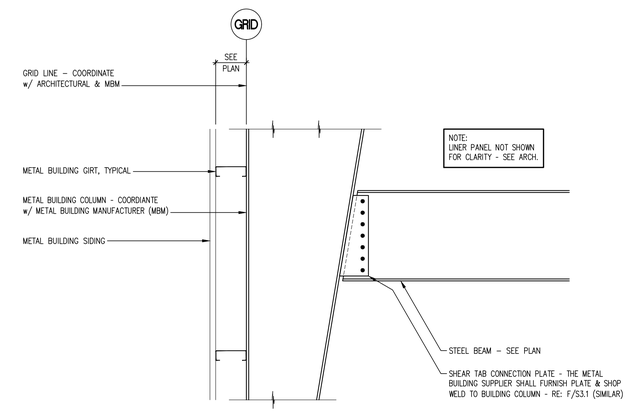

DETAIL A / S5.1
SCALE: 3/4" = 1'-0"

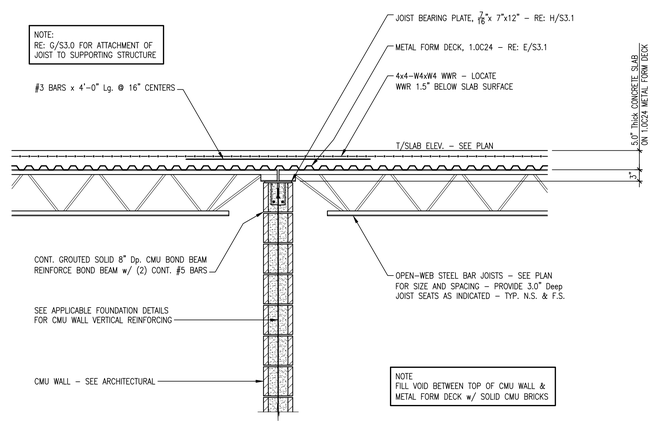

SECTION 6 / S5.1
SCALE: 3/4" = 1'-0"

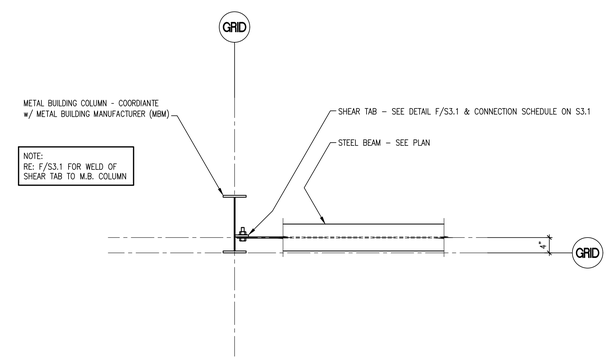

DETAIL B / S5.1
SCALE: 3/4" = 1'-0"

SHERMAN CARTER BARNHART ARCHITECTS

STATE OF KENTUCKY WILLIAM E. GRIGSBY, JR. 16114 LICENSED PROFESSIONAL ENGINEER

NEW SPENCER COUNTY BUS GARAGE

TAYLORSVILLE, KENTUCKY

MEZZANINE - STEEL FRAMING SECTIONS and DETAILS

JOB NO.	1745
DATE	12/16/2019
DRAWN	griggs
CHECKED	WEG/BKL

COPYRIGHT © 2019 SHERMAN CARTER BARNHART ARCHITECTS, PLLC

REVISIONS

No.	Description	Date

SHEET

S5.1

1745
NEW SPENCER COUNTY BUS GARAGE
TAYLORSVILLE, KENTUCKY

- SEE ARCHITECTURAL

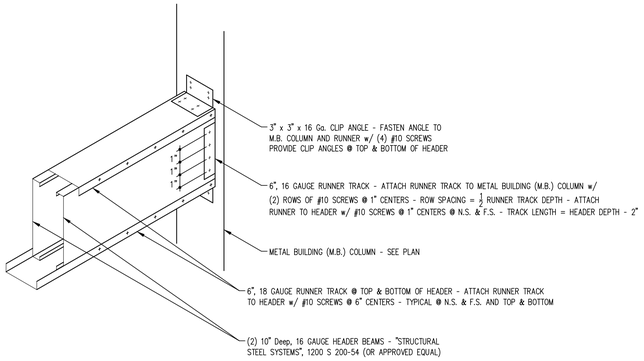

TWO MEMBER BOX HEADER

TYPICAL DETAIL

SCALE: NONE

A / S5.2

NOTE:
PROVIDE BLOCKING @ THIRD-POINTS OF JOIST SPAN – SEE PLAN
BLOCKING SHALL BE THE SAME SIZE AND GAUGE AS METAL JOISTS
ATTACH BLOCKING TO JOISTS @ EACH END w/ 2"x2"x 18 Ga. ANGLE AND (3) #10 SCREW IN THE JOIST & THE BLOCKING AS INDICATED

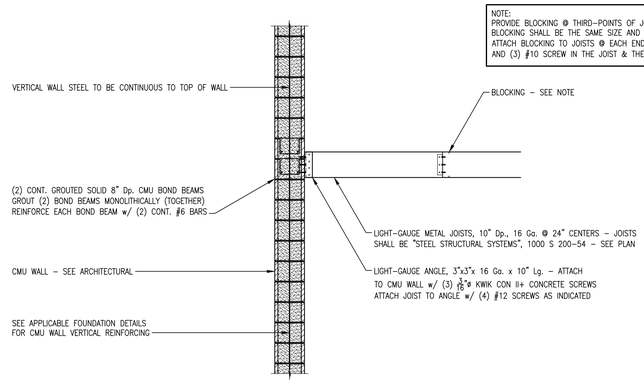

SECTION

SCALE: 3/4" = 1'-0"

1 / S5.2

NOTE:
ATTACH LIGHT-GAUGE JOISTS TO LIGHT-GAUGE HEADER BEAM w/ 3"x3"x 18 Ga. ANGLE AND (4) #12 SCREWS IN JOIST & HEADER AS INDICATED

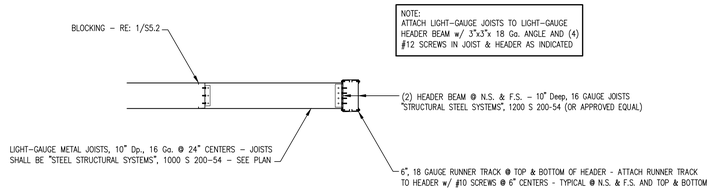

SECTION

SCALE: 3/4" = 1'-0"

2 / S5.2

SHERMAN CARTER BARNHART ARCHITECTS

COMMONWEALTH OF KENTUCKY
WILLIAM E. GROSBY, JR.
16114
LICENSED PROFESSIONAL ENGINEER

NEW SPENCER COUNTY BUS GARAGE

TAYLORSVILLE, KENTUCKY

MEZZANINE - STEEL FRAMING SECTIONS and DETAILS

JOB NO.	1745
DATE	12/16/2019
DRAWN	griggs
CHECKED	WEG/BKL

COPYRIGHT © 2019
SHERMAN CARTER BARNHART ARCHITECTS, PLLC

REVISIONS

No.	Description	Date

SHEET

S5.2

ABBREVIATIONS

A	
@	At
AB	Anchor Bolt
&	And
A/C	Air Conditioning
ACOUS	Acoustical
ACT	Actual
ADA	Americans with Disabilities Act
ADJ	Adjust, Adjustable
ADH	Adhesive
AFF	Above Finish Floor
AGG	Aggregate
AHU	Air Handling Unit
ALUM	Aluminum
ANCH	Anchor
AP	Access Panel
APPROX	Approximate
ASSY	Assembly
AUTO	Automatic
B	
BD	Board
BTWN	Between
BEV	Beveled
BIT	Bituminous
BLK	Block
BLKG	Blocking
BM	Beam, Bench Mark
B.O.	Bottom of
BOT or BTM	Bottom
BUR	Built Up Roofing
C	
CAB	Cabinet
CB	Catch Basin, Chalkboard
C/C	Center to Center (Same meaning as OC)
CEM	Cement
CER	Ceramic
CF	Cubic Feet
CFI	Contractor Furnished and Installed
CHAN	Channel
CI	Cast Iron
CJ	Control Joint
CLG	Ceiling
CLOS	Closet
CLR	Clear
CMU	Concrete Masonry Unit
COL	Column
CONC	Concrete
COND	Condition, Condenser, Condensate
CONST	Construction
CONT	Continuous
CONTR	Contractor
CORRUG	Corrugated
CR	Cold Rolled
CSG	Casing
CTSK	Countersink
CU	Cubic
CULV	Culvert
CW	Cold Water, Clockwise
CY	Cubic Yard
D	
DBL	Double
DEP	Depressed
DET	Detail
DF	Drinking Fountain
DIA	Diameter
DIM	Dimension
DN	Down
DO	Ditto
DS	Downspout
DWG(S)	Drawing(s)
E	
EA	Each
EJ	Expansion Joint
EL or ELEV	Elevation
ELEC	Electric, Electrical
EMER	Emergency
ENCL	Enclosure
ENT	Entrance
EQ	Equal
EQUIV	Equivalent
ESMT	Easement
EW	Each Way
EWC	Electric Water Cooler (see mech dwgs)
EXIST	Existing
EXP	Expansion
EXT	Exterior
F	
FAB	Fabricate
FC	Fire Code
FD	Floor Drain (see mech dwgs)
FDN	Foundation
FE	Fire Extinguisher
FEC	Fire Extinguisher Cabinet
FFE	Finished Floor Elevation
FH	Flat Head
FIN	Finish, Finished
FL	Floor
FLASH	Flashing
FLEX	Flexible
FRT	Fire Retardant Treated
FTG	Footing
FURR	Furring
FV	Field Verify
G	
GA	Gauge
GALV	Galvanized
GB	Grab Bar
GEN	Generator
GF CMU	Ground Face Conc. Mas. Unit
GI	Galvanized Iron
GFI	Ground Fault Interrupt
GL	Glass, Glazing
GLUE LAM	Glue-Laminated
GND	Ground
GR	Grade
GST	Glazed Structural Tile
GYP	Gypsum
H	
H	High
HARD	Hardened
HB	Hose Bib
HC	Hollow Core
HD BD	Hard Board
HC	Handicapped
HDR	Header
HDWE	Hardware
HD WD	Hardwood
HEX	Hexagonal
HT	Height
HOL	Hollow
HM	Hollow Metal
HORIZ	Horizontal
HP	Horsepower
HTG	Heating
HTR	Heater
HW	Hot Water, Hard White
I	
ID	Inside Diameter
IF	Inside Face
INCL	Included
INSUL	Insulation
INT	Interior
INV	Invert
J	
JB	Junction Box
JST	Joist
JT	Joint
K	
KBC	Kentucky Building Code

L	
L	Angle, Long
LAM	Laminate
LF	Light Fixture, Linear Feet
LH	Left Hand
LLV	Long Leg Vertical
LOC	Location
LT	Light
LTWT	Lightweight
M	
MAS	Masonry
MATL	Material
MAX	Maximum
MB	Marker Board
MC	Miscellaneous Channel
MDO	Medium Density Overlay
MECH	Mechanical
MED	Medium, Medicine
MTL	Metal
MFR	Manufacturer
MH	Manhole
MIN	Minimum, Minute
MISC	Miscellaneous
ML & P	Metal Lath and Plaster
MO	Masonry Opening
MT	Marble Threshold
MTD	Mounted
MTG	Mounting
MULL	Mullion
N	
NA	Not Applicable
NET	Means Exact Dimension Required
NIC	Not in Contract
NO. or #	Number
NOM	Nominal
NTS	Not to Scale
O	
OC	On Center
OD	Outside Diameter
OF	Outside Face
OFOI	Owner Furnished and Installed
OF-CI	Owner Furnished, Contractor Installed
OH	Overhead
OPNG	Opening
OPP	Opposite
P	
PART	Partition
PART BD	Particle Board
PASS	Passage
PC	Precast
P/C	Poured Concrete
PERF	Perforated
PERIM	Perimeter
PERP	Perpendicular
PF CMU	Prefaced Conc. Mas. Unit
PH	Phase
PLAS	Plaster
PLUMB	Plumbing
PLYWD	Plywood
POL	Polished
POLY CARB	Polycarbonate Sheet
PREFAB	Prefabricated
PROJ	Project, Projected
PR	Pair
PSMB	Pencil Sharpener Block
PT	Point, Pressure Treated
PVC	Polyvinyl Chloride
PVMT	Pavement
PWG	Polished Wire Glass
±	Plus or Minus
Q	
QT	Quarry Tile
R	
R	Riser, Radius
R or RAD	Radius
RCP	Reinforced Concrete Pipe
RD	Roof Drain
REBAR	Reinforcing Bar
RECIRC	Recirculate
REF	Reference, Refer
REFR	Refrigerator
REINF	Reinforce, Reinforced, Reinforcing
REQD	Required
RET	Retaining, Return
RESIL	Resilient
RH	Right Hand, Round Head
RO	Rough Opening
ROW or R/W	Right of Way
S	
SC	Solid Core
SCHD	Schedule
SECT	Section
SEP	Separate, Separation
SF	Square Feet, Split Face
SHEATH	Sheathing
SHT	Sheet
SIM	Similar
S.M.	Shaped Metal
SPA	Space(s)
SPEC	Specifications
SPM	Single-ply Membrane
SQ	Square
SS	Stainless Steel
STA	Station
STD	Standard
STL	Steel
STOR	Storage
STRUCT	Structural
SUSP	Suspended
SYMM	Symmetrical
T	
T	Tread, Thick
TB	Tackboard
TC	Top of Curb
TCE	Top of Curb Elevation
TDS	Turned Down Slab
TEL	Telephone
TFE	Top of Footing Elevation
T & G	Tongue and Groove
THK	Thick, Thickness
THRESH	Threshold
T.O.	Top of
TOC	Top of Concrete
TOIL	Toilet
TOS	Top of Steel
TS	Tack Strip, Structural Steel Tubing
TOW	Top of Wall
TYP	Typical
U	
UG	Underground
UL	Underwriters Laboratory
UNFIN	Unfinished
UNO	Unless Noted Otherwise
V	
VAC	Vacuum
VB	Vapor Barrier
VCT	Vinyl Composition Tile
Vert	Vertical
VIF	Verify in Field
W	
W	Wide
WWF	Welded Wire Fabric
X	
X	By
Y	
YD	Yard

WALL / PARTITION SCHEDULE

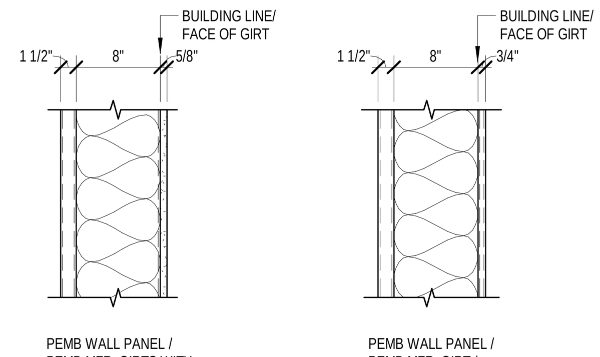

PEMB WALL PANEL /
PEMB MFR. GIRTS WITH
8" METAL STUD FRAMING @
16" O.C. BETWEEN GIRTS /
VINYL FACED R-19 BATT INSUL. /
VAPOR BARRIER /
5/8" GYP. BOARD

A

PEMB WALL PANEL /
PEMB MFR. GIRT /
VINYL FACED R-19 BATT. INSUL. /
PEMB LINER PANEL

B

B1 OMIT INSULATION

EXTERIOR WALL TYPES

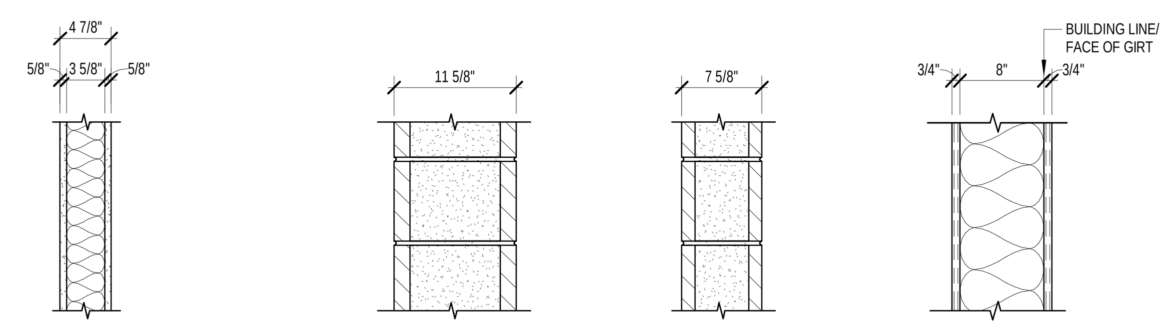

5/8" GYP. BD. /
3 5/8" METAL STUD FRAMING @ 16" O.C. /
SOUND BATTS /
5/8" GYP. BD.

1

12" (NOM.) CMU, SAND FILLED

2

8" (NOM.) CMU, SAND FILLED

3

PEMB LINER PANEL /
PEMB MFR. GIRT /
VINYL FACED R-19 BATT. INSUL. /
PEMB LINER PANEL

4

INTERIOR WALL TYPES

SIGNAGE (BY OWNER NIC)

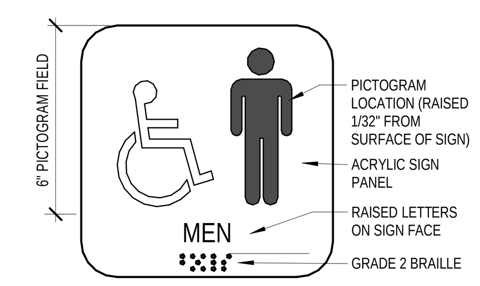

SIGN DETAIL
3" = 1'-0"
A

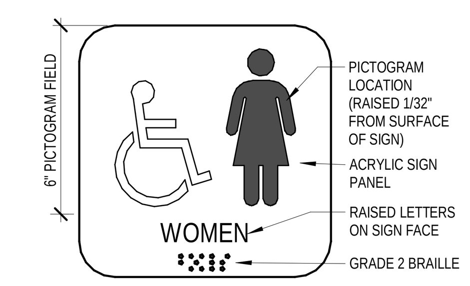

SIGN DETAIL
3" = 1'-0"
B

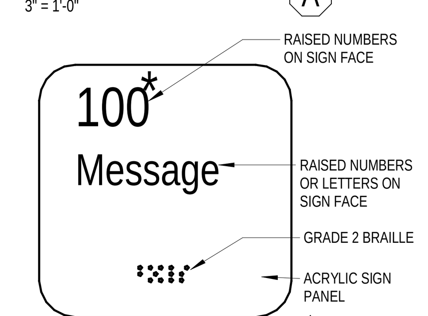

SIGN DETAIL
3" = 1'-0"
C

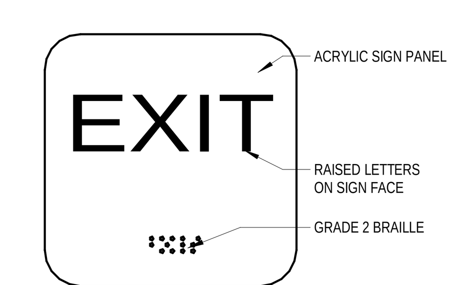

SIGN DETAIL
3" = 1'-0"
D

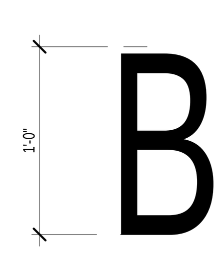

EXTERIOR BUILDING LETTER AT EXTERIOR DOORS. REFER TO ELEVATIONS ON A-3 FOR LOCATION. REFER TO SPECIFICATIONS

SIGN DETAIL
N.T.S.
E

PARTITION TYPE GENERAL NOTES:

P1 PARTITION TYPE, REFER TO SCHEDULE, THIS SHEET. ALL INTERIOR CMU WALLS TO BE EXTENDED FULL HEIGHT TO UNDERSIDE OF ROOF DECK OR FLOOR ABOVE.

ALL INTERIOR MTL. STUD PARTITIONS SHALL EXTEND TO FLOOR DECK OR LIGHT GA. MTL. JOISTS ABOVE.

P1A ALL INTERIOR PARTITIONS ARE WALL TYPE 1, UNO.

P2 PARTITION TYPES ARE INDICATED ON PLANS, SECTIONS AND DETAILS.

P3 INTERIOR PARTITION TYPES ARE IDENTIFIED BY NUMBER AND EXTERIOR WALL ASSEMBLY TYPES BY LETTER.

P4 PROVIDE SPECIFIED CLOSURES AND INSTALL BETWEEN DECK FLUTES AND MASONRY AND DRYWALL PARTITIONS TO ACHIEVE FULL AND COMPLETE CLOSURE OF ALL VOIDS AT TOP OF WALLS INDICATED TO EXTEND FULL HEIGHT.

P5 PARTITION TYPES SHALL MAINTAIN THEIR RESPECTIVE SEPARATION RATING (IF ANY) FOR FULL HEIGHT. ALL MECH., ELEC. AND PLUMBING PENETRATIONS SHALL BE SEALED / SAFED / DAMPERED AS REQUIRED TO COMPLY WITH APPLICABLE CODES.

P6 REFER TO SPECIFIED FIRESTOPPING MEASURES REQUIRED AT ALL RATED WALL ASSEMBLIES AND AS FOLLOWS:

PROVIDE THE FOLLOWING CLOSURE MATERIALS AT TOP OF INTERIOR MASONRY WALL AND PARTITIONS.

(a) FULL-HEIGHT NON-RATED WALLS: FILL VOIDS WITH BATT INSULATION.

(b) RATED FULL HEIGHT WALLS: FILL VOIDS WITH FIRE SAFING AND INSTALL BACKER ROD AND FIRE RATED SEALANT ON EACH SIDE OF WALL.

(c) FULL HEIGHT UNRATED INCIDENTAL USE SEPARATION PARTITIONS: FILL VOIDS WITH INSULATION AND INSTALL BACKER ROD AND SEALANT ON EACH SIDE OF WALL.

P7 ALL DIMENSIONS SHOWN ARE TO FACE OF MASONRY, METAL STUDS OR CENTERLINE OF PEMB STRUCTURE. MASONRY DIMENSIONS ARE NOMINAL. EXTERIOR WALL DIMENSIONS ARE TO FACE OF PEMB STRUTURE.

P8 PAINT ALL INTERIOR GYPSUM BOARD EXPOSED TO VIEW, U.N.O (N.I.C., BY OWNER)

P9 REFER TO ROOM FINISH GROUPS FOR WALL BASE CONDITION.

P10 PROVIDE WATER RESISTANT GYPSUM BOARD AT ALL "WET WALL" LOCATIONS (BEHIND SINKS, WATER COOLER, TOILETS, ETC.)

GENERAL SIGNAGE NOTES

1. CHARACTERS SHOWN ON THIS SHEET ARE COMPUTER GENERATED SPACING OF CHARACTERS IS NOT ACCURATE. CORRECT "VISUAL" SPACING IS THE RESPONSIBILITY OF THE MANUFACTURER.
2. PICTOGRAMS ARE SHOWN HEREIN FOR INFORMATION AND INTENT ONLY. MECHANICAL, CAMERA- READY ARTWORK SHALL BE SUPPLIED BY THE SIGNAGE CONTRACTOR.
3. COLORS OF PANEL SIGNS TO BE SELECTED BY ARCHITECT.
4. UNLESS OTHERWISE NOTED, ALL SIGNS TO BE MOUNTED BESIDE DOORS AT 5'-0" A.F.F. TO CENTER OF SIGN AND 2" FROM EDGE OF DOOR FRAME ON THE STRIKE SIDE. THE ARCHITECT SHALL BE CONSULTED BEFORE PLACEMENT OF SIGNAGE FOR LEFTHAND AND RIGHTHAND ORIENTATION OF SIGNS.
5. UNLESS OTHERWISE NOTED, ALL SIGNS TO BE MOUNTED UNDER WINDOW OR SIDELITES SHALL BE MOUNTED 2 FROM BOTTOM OF SILL TO TOP EDGE OF SIGN AND CENTERED ON THE WINDOW.
6. ON SIGN DETAILS = THREE CHARACTER NUMBER TO BE SUPPLIED BY ARCHITECT.
7. ALL SIGNAGE SHALL MEET REQUIREMENTS FOR ADAAG OF THE AMERICANS WITH DISABILITIES ACT (ADA).
8. MESSAGE (COPY) TO BE DETERMINED BY ARCHITECT/OWNER.
9. ALL SIGNS TO BE 8"x8".
10. NOTE. ROOM NAMES AND NUMBERS SHOWN HERE ARE FOR CONSTRUCTION PURPOSES ONLY. FINAL ROOM NAMING AND NUMBERING FOR SIGNAGE SHALL BE PROVIDED BY OWNER.
11. ALL SIGNAGE SHOWN MOUNTED ON ALUM STOREFRONT FRAMES TO BE FULLY ADHERED TO THE GLASS 5-0 A.F.F. WITH FINISHED BACK PANEL.

ROOM FINISH GROUPS

GENERAL NOTES:

1. REFER TO SHEET A-4 FOR FLOOR TRANSITION / THRESHOLD DETAILS.
2. REFER TO REFLECTED CEILING PLAN ON SHEET A-1 FOR CEILING INFORMATION

RFG 1

FLOOR	SEALED CONCRETE
BASE	4" RESILIENT BASE
WALLS	PAINT BY OWNER
CEILING	REFER TO RCP

RFG 2

FLOOR	SEALED CONCRETE W/ MEDIUM BROOM FINISH
BASE	NONE
WALLS	METAL LINER PANEL (BY PEMB MFR.) CONTRACTOR TO PAINT STEEL STRUCTURE CMU (PAINT BY OWNER)
CEILING	REFER TO REFLECTED CEILING PLANS, CONTRACTOR TO PAINT STEEL STRUCTURE

NOTE: PROVIDE HEXAGONAL WIRE MESH AT UNDERSIDE OF ROOF STRUCTURE/BATTS. IN BUS BAY

LEGEND

- ROOM NAME (SHEET A-1)
- ROOM FINISH GROUP (SHEET A-0)
- ROOM NUMBER (SHEET A-1)
- DOOR NUMBER (SCHEDULE, SHEET A-4)
- WALL TYPE (SHEET A-0)
- WINDOW TYPE (ELEVATIONS, SHEET A-4)
- TOILET ACCESSORY (SCHEDULE, SHEET A-1)
- KEYNOTES (SHEET A-1)
- ELEVATION KEY NOTE (SHEET A-3)
- ROOF PLAN KEY NOTE (SEEHT A-2)
- SIGNAGE TYPE (SHEET A-0)
- ELEVATION MARK
- COLUMN LINE / FACE OF GIRT IDENTIFICATION
- FEC — FIRE EXTINGUISHER IN SEMI-RECESSED CABINET, REFER TO DETAIL 11/A-2.
- FE — FIRE EXTINGUISHER ON WALL MOUNTED BRACKET. MOUNT TOP OF HANDLE AT 54" A.F.F.
- FD — FLOOR DRAIN. REFER TO PLUMBING DRAWINGS.
- DETAIL OR ENLARGED PLAN
- EXTERIOR OR INTERIOR ELEVATIONS
- PARTIAL SECTION OR DETAILS
- WALL OR BUILDING SECTION

GENERAL NOTES

G1 (NIC) MEANS NOT IN CONTRACT. TO BE PROVIDED BY OWNER AND INSTALLED BY OWNER. (OFCI) MEANS OWNER FURNISHED, CONTRACTOR INSTALLED

G2 DO NOT SCALE DRAWINGS. WRITTEN DIMENSIONS TAKE PRECEDENCE OVER SCALED DIMENSIONS.

G3 ALL DIMENSIONS SHOWN ARE TO FACE OF MASONRY, METAL STUDS OR CENTERLINE OF PEMB STRUCTURE. MASONRY DIMENSIONS ARE NOMINAL. EXTERIOR WALL DIMENSIONS ARE TO FACE OF BLDG. LINE / FACE OF GIRT.

G4 REFER TO ENLARGED PLANS FOR DIMENSIONS NOT SHOWN ON 1/8" PLANS

G5 PROVIDE BULLNOSE UNITS AT ALL EXPOSED CONCRETE BLOCK CORNERS, UNLESS OTHERWISE NOTED.

G6 ALL CONCEALED WOOD BLOCKING, NAILERS AND PLYWOOD SHALL BE FIRE—RETARDANT TREATED (F.R.T.) WHERE BLOCKING IS INDICATED OR REQ'D. WOOD TRIM, INTERIOR ARCHITECTURAL WOODWORK, CASEWORK AND MILLWORK IS NOT REQUIRED TO BE F.R.T. ALL EXTERIOR WOOD FRAMING AND BLOCKING SHALL BE PRESSURE PRESERVATIVE TREATED. ALL CONCEALED INTERIOR WOOD FRAMING AND BLOCKING SHALL BE FIRE RETARDANT WOOD TREATED.

G7 REFER TO STRUCTURAL DRAWINGS FOR TYPES, SIZE, LOCATION, CONNECTIONS, REINFORCEMENT AND OTHER REQUIREMENTS PERTAINING TO STRUCTURAL COMPONENTS INDICATED.

G8 REFER TO STRUCTURAL DRAWING FOR LINTEL SCHEDULE.

G9 REFER TO STRUCTURAL DRAWINGS FOR VERTICAL REINFORCING IN CMU WALLS, POURED CONCRETE SLABS AND FOUNDATIONS.

G10 ALL CHANGES IN FLOOR FINISHES SHALL OCCUR AT DOOR THRESHOLDS - TYPICAL.

G11 ALL WOOD BLOCKING IN CONTACT WITH CONCRETE OR CMU SHALL BE PRESSURE TREATED.

G12 MOUNTING HEIGHTS:
TB (TACK BOARD) MOUNT TOP AT 6'—8" AFF
MB (MARKER BOARD) MOUNT TOP AT 6'—8" AFF

G13 CONTACT BETWEEN DISSIMILAR METALS SHALL BE SEPARATED WITH BUTYL TAPE OR OTHER MEANS TO PREVENT GALVANIC CORROSION.

G14 CONTRACTOR SHALL PROVIDE ALL CONCEALED BLOCKING REQUIRED FOR ATTACHMENT AND SUPPORT OF EQUIPMENT, FIXTURES, WINDOWS, ETC. IN CONTRACT.

G15 ALL EXPOSED CORNERS AND EDGES OF GYPSUM BOARD SHALL BE FINISHED WITH CORNER BEAD OR J—BEAD, RESPECTIVELY AND WALL PROTECTION COVER. REFER TO SPECS.

G16 UNLESS OTHERWISE NOTED IN DRAWINGS. EXTEND ALL INTERIOR METAL STUD PARTITIONS TO HORIZONTAL GYP. BD. ASSEMBLY AND INTERIOR CMU PARTITIONS TO STRUCTURE ABOVE. PROVIDE CLOSURE T0 DECK 0R ROOF W/ BATT INSULATION OR FIRE—SAFING AS REQUIRED. ANY ADJACENT A.F.F. DESIGNATION IDENTIFIES A SPECIFIC PARTITION HEIGHT.

G17 PARTITIONS TYPES ARE TO MAINTAIN THEIR RESPECTIVE SEPARATION/ RATING (IF ANY) FULL HEIGHT. ALL HVAC, ELECTRICAL, PLUMBING PENETRATIONS ARE TO BE SEALED/ SAFED/ DAMPERED TO COMPLY WITH LOCAL CODES.

G18 CONTRACTOR SHALL VERIFY ALL ROUGH OPENING SIZES FOR WINDOWS AND DOORS AND COORDINATE ANY REQUIRED ADJUSTMENTS WITH THE ARCHITECT.

SHERMAN CARTER BARNHART ARCHITECTS

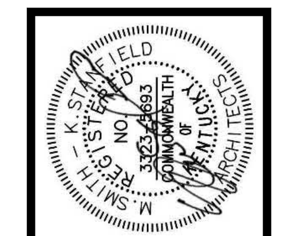

NEW SPENCER COUNTY BUS GARAGE

TAYLORSVILLE, KENTUCKY

ABBREVIATIONS, SYMBOL LEGEND, GENERAL NOTES AND PARTITION TYPES

JOB NO.	1745
DATE	11/25/19
DRAWN	ALC
CHECKED	ASC, BKL

COPYRIGHT © 2019 SHERMAN CARTER BARNHART ARCHITECTS, PLLC

REVISIONS

No.	Description	Date

SHEET

A-0

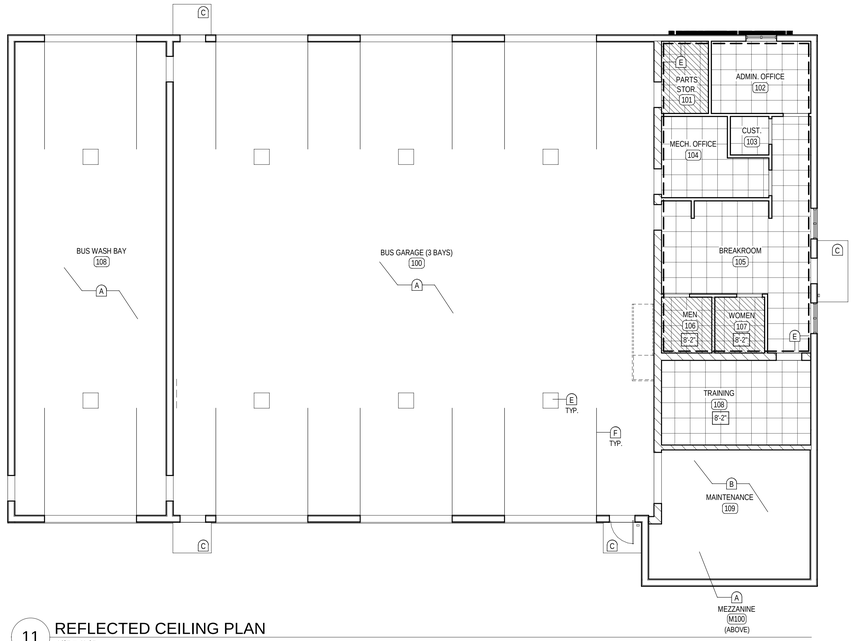

11 REFLECTED CEILING PLAN
1/8" = 1'-0"

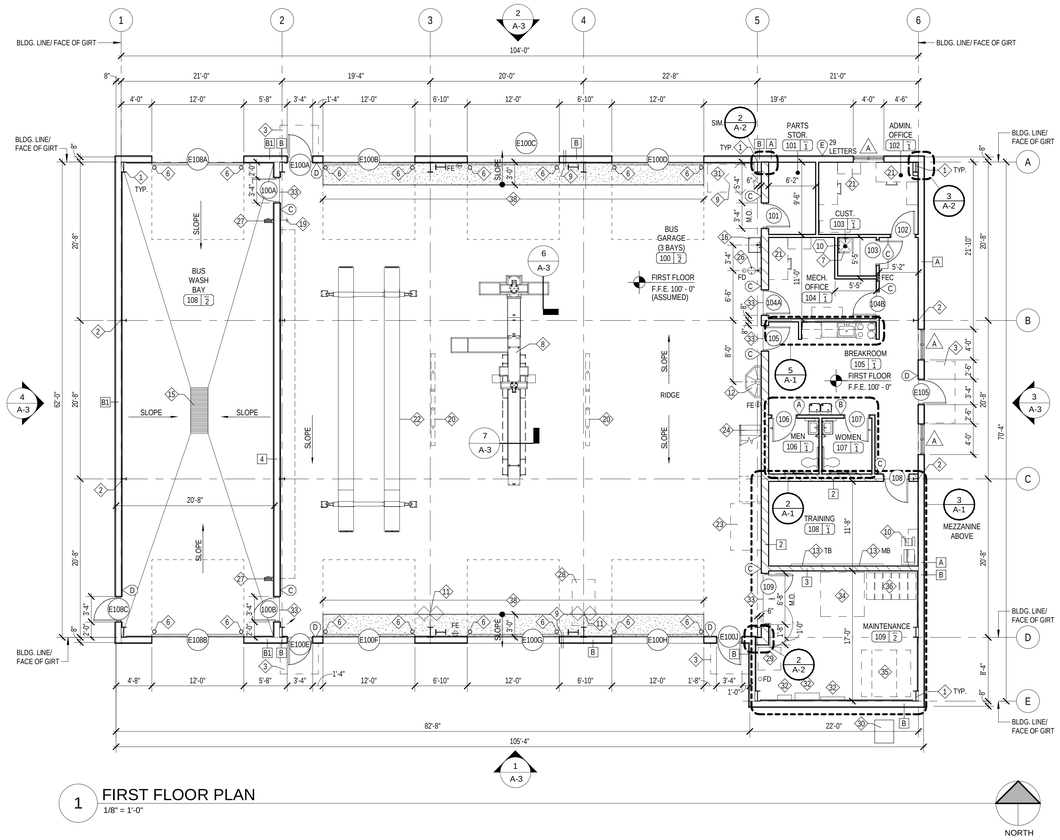

1 FIRST FLOOR PLAN
1/8" = 1'-0"

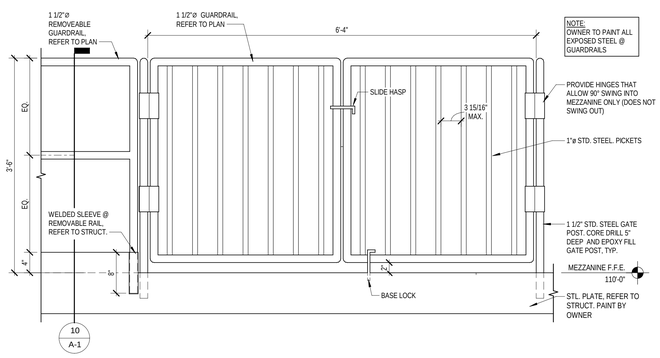

9 MEZZANINE ELEVATION
1" = 1'-0"

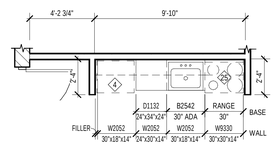

5 ENLARGED CASEWORK PLAN
1/4" = 1'-0"

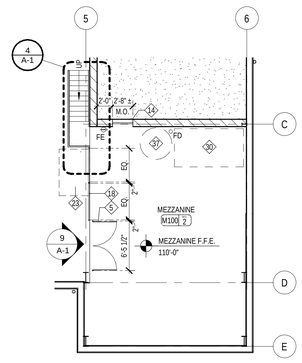

3 MEZZANINE PLAN
1/8" = 1'-0"

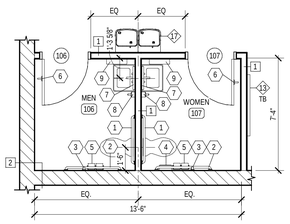

2 ENLARGED RESTROOM PLAN
1/4" = 1'-0"

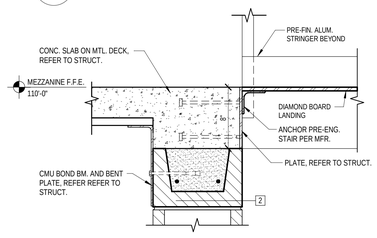

6 INDUSTRIAL STAIR DETAIL
1 1/2" = 1'-0"

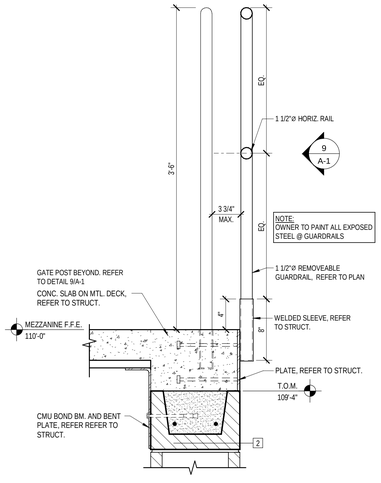

10 GUARDRAIL DETAIL
1 1/2" = 1'-0"

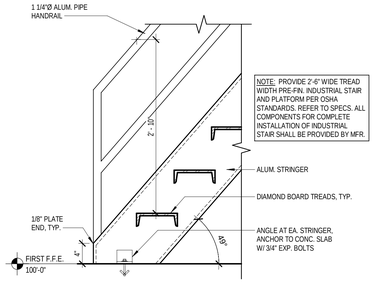

8 INDUSTRIAL STAIR DETAIL
1" = 1'-0"

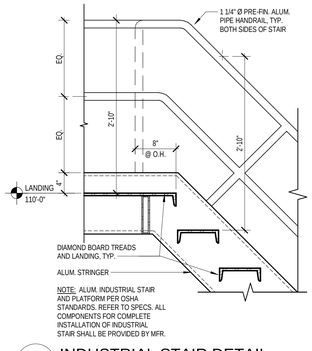

7 INDUSTRIAL STAIR DETAIL
1" = 1'-0"

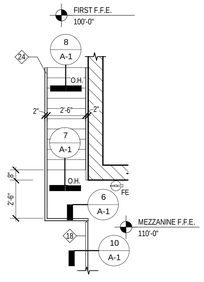

4 ENLARGED STAIR PLAN
1/4" = 1'-0"

TOILET ACCESSORY SCHEDULE

REFER TO DETAIL BELOW FOR TYPICAL GRAB BAR AND ACCESSORIES LAYOUT

#	ACCESSORY	MTG. HT.	MFR./MODEL #
1	36" S.S. GRAB BAR (1-1/4")	33" TO CENTERLINE	ASI 3100 SERIES
2	42" S.S. GRAB BAR (1-1/4")	33" TO CENTERLINE	ASI 3100 SERIES
3	18" VERTICAL S.S. GRAB BAR (1-1/4")	REFER TO GRAB BAR LAYOUT TB/A2.1	ASI 3100 SERIES
4	SANITARY NAPKIN DISPOSAL	24" TO TOP	BY OWNER
5	TOILET PAPER DISPENSER	23" TO CENTERLINE	BY OWNER
6	CLOTHES HOOK (SURFACE MOUNTED)	48" TO CENTER	ASI 8425
7	MIRROR W/ S.S. FRAME - 18"x36"	40" TO BOTTOM	ASI 0600
8	SOAP DISPENSER	40" TO VALVE	BY OWNER
9	PAPER TOWEL DISPENSER (SURFACE MOUNTED)	44" TO SLOT 4" MAX PROJECTION	BY OWNER
10	MOP AND BROOM HOLDER	60" TO TOP OF SHELF	

GENERAL TOILET ACCESSORY NOTES:

1. MODEL NUMBERS DENOTE TOILET ACCESSORY PRODUCTS OFFERED BY ASI, AMERICAN SPECIALTIES INC. AND REPRESENT THE LEVEL OF QUALITY REQ'D.
2. ALL ITEMS SHALL BE LOCATED HORIZ. AND MTD. TO SPECIFIC POINTS A.F.F. IN ACCORDANCE W/ ALL APPLICABLE REQUIREMENTS OF "AMERICANS WITH DISABILITIES ACT" (A.D.A.).
3. REFER TO MECH, PLBG, AND ELEC. DWGS AND SPECS FOR PLBG FIXTURES AND CONTROLS. ALL EXPOSED PIPING @ HC LAV'S. SHALL BE INSULATED AND COVERED W/ RIGID JACKET.
4. REFER TO ALL FLOOR PLAN SHEETS FOR ACCESSORIES REQUIRED AT OTHER LOCATIONS.

TYPICAL GRAB BAR AND ACCESSORIES LAYOUT

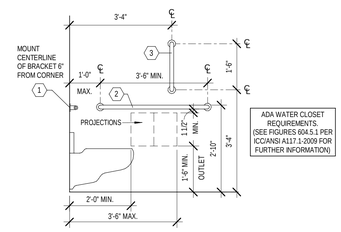

NEW WORK KEYNOTES

NOTE: NOT ALL KEYNOTES MAY APPLY TO THIS SHEET.

1. PEMB FRAME COLUMN.
2. PEMB END WALL STRAIGHT COLUMN.
3. PEMB CANOPY. REFER TO BUILDING ELEVATIONS AND DETAIL 9/A-2.
4. REFRIGERATOR, N.I.C.
5. METAL GATE. REFER TO DETAIL 9/A-1.
6. CONCRETE FILLED PIPE BOLLARDS (PAINT). REFER TO DETAIL 5/A-3.
7. MOP SINK. REFER TO PLUMBING DRAWINGS.
8. IN GROUND BUS LIFT SYSTEM. REFER TO SPECIFICATIONS. COORDINATE FINAL LAYOUT AND LOCATION OF LIFT SYSTEM W/ LIFT MANUFACTURER.
9. HEATER ABOVE. REFER TO MECHANICAL DRAWINGS.
10. COPIER W/ WALL CABINETS ABOVE, N.I.C.
11. WALL MOUNTED FAN ABOVE (OFOI). REFER TO ELECTRICAL DRAWINGS.
12. HAND WASH SINK. REFER TO PLUMBING DRAWINGS.
13. 8'-0"Wx4'-0"H MARKER BOARD AND/OR 4'-0"Wx4'-0"H TACK BOARD. MOUNT TOP OF BOARDS @ 7'-0" A.F.F.
14. HINGED ACCESS PANEL AND FRAME (2'-6"x2'-6" @ 2'-8" A.F.F. TO BOTTOM) W/ KEY CYLINDER. BASIS OF DESIGN IS BEST ACCESS DOORS OR APPROVED EQUAL.
15. TRENCH DRAIN. REFER TO PLUMBING DRAWINGS.
16. UTILITY SINK. REFER TO PLUMBING DRAWINGS.
17. DOUBLE ELECTRIC WATER COOLER W/ BOTTLE FILLER. REFER TO PLUMBING DRAWINGS.
18. REMOVABLE GUARDRAIL. REFER TO DETAIL 10/A-1.
19. HOSE BIB. REFER TO PLUMBING DRAWINGS.
20. COMPRESSED AIR, WATER, OIL, AND POWER DROPS. REFER TO MECHANICAL DWGS.
21. FURNITURE, N.I.C.
22. RAMPED BUS/TRUCK LIFT. REFER TO SPECIFICATIONS.
23. PORTABLE EQUIPMENT LIFT, N.I.C.
24. FIXED INDUSTRIAL STAIR W/ PLATFORM. REFER TO DETAIL 4/A-1.
25. ADA COMPLIANT RANGE AND MICROWAVE ABOVE, N.I.C.
26. EYE WASH STATION.
27. HOSE REEL MOUNTED TO STRUCTURE ABOVE. REFER TO PLUMBING DRAWINGS.
28. OIL TANK FOR BUS, N.I.C.
29. AIR COMPRESSOR, N.I.C.
30. HVAC UNIT. REFER TO MECHANICAL DRAWINGS.
31. WASTE OIL HEAT TANK.
32. ELECTRICAL PANELS. REFERT TO ELECTRICAL DRAWINGS.
33. FEATHER CONC. WHERE SLOPED CONC. MEETS LEVEL CONC. REFER TO A-4 FOR THRESHOLD CONDITIONS.
34. TIRE CHANGER, N.I.C.
35. TIRE BALANCER, N.I.C.
36. STORAGE FOR (6) BUS TIRES, N.I.C.
37. WATER HEATER. REFER TO PLUMBING DRAWINGS.
38. SLOPE FLOOR 1/8"/1'-0" TOWARD EXTERIOR TO LIMITS INDICATED BY HATCH.

CASEWORK NOTES

TYPICAL CASEWORK MODEL NUMBERS SHOWN ARE TMI SYSTEMS DESIGN CORP. (PHONE NO. 1-800-456-6716) AND REPRESENT THE LEVEL OF QUALITY REQUIRED AND SHALL BE USED AS THE BASIS FOR EQUAL PRODUCTS. HEIGHT INDICATED IS TO TOP OF COUNTERTOP.

XXXXX — TMI MODEL #
WxHxD — WIDTHxHEIGHT (T.O. COUNTERTOP) xDEPTH

A MOUNT ALL WALL CASEWORK PER ADA GUIDELINES.
B PROVIDE FINISHED END PANELS AT ALL EXPOSED LOCATIONS.
C PROVIDE 4" BACK AND SIDE SPLASH AT ALL WALL LOCATIONS.
D ALL WALL AND BASE CABINETS SHALL HAVE LOCKS ON DOORS AND DRAWERS. PROVIDE ONE KEY SYSTEM PER EACH ROOM AND ONE MASTER KEY.
E PROVIDE INFILL PANELS AS REQ'D TO CONCEAL VOIDS @ BASE CABINETS.
F PROVIDE WOOD BLKG. AS NEEDED TO SUPPORT COUNTER TOP. COORD. W/ UNDER COUNTER EQUIPMMENT
G PLUMBING PIPES TO RUN BELOW CASEWORK AS SHOWN ON MECH. DWGS.

GENERAL CEILING NOTES

1. REFER TO WALL TYPES FOR DESCRIPTION OF WALLS EXTENDING TO UNDERSIDE OF DECKING AND/ OR STRUCTURE ABOVE.
2. CEILING TO BE SUSPENDED ACOUSTICAL PANEL SYSTEM 9'-0" A.F.F. U.N.O.
3. PROVIDE REMOVABLE SECTION OF CEILING GRID BELOW AND AROUND EACH MECH. UNIT. ENTIRE SECTION INCLUDING MAIN TEES AND CROSS TEES TO BE REMOVABLE WITHOUT DAMAGE TO REMAINDER OF CEILING. REFER TO M&E DRAWINGS FOR EXACT LOCATION OF MECH UNITS.
4. REFER TO DOOR, WINDOW DETAILS AND STRUCT. DWGS FOR SPECIFIC LINTEL LOCATIONS. PAINT EXPOSED STL. LINTELS (GALV. AT EXTERIOR LOCATIONS)

REFLECTED CEILING PLAN KEY NOTES

A. EXPOSED STRUCTURE, PAINT.
B. EXPOSED STRUCTURE, NO FINISH.
C. PEMB CANOPY. REFER TO BUILDING ELEVATIONS AND DETAIL 9/A-2.
D. DASHED LINES INDICATE EXTENT OF HORIZ. ASSEMBLY. 10" MTL. JOISTS @ 4'-0" O.C. W/ GYP. CLG. BD. ON EACH SIDE @ 13'-0" A.F.F. TO B.O. ASSEMBLY.
E. OVERHEAD DOOR OPERATOR.
F. OVERHEAD DOOR TRACK.

REFLECTED CEILING LEGEND

2'x2' SUSPENDED ACOUSTICAL CEILING @ 9'-0" A.F.F. U.N.O.
2'x2' SUSPENDED ACOUSTICAL CEILING @ 9'-0" A.F.F. U.N.O. W/ HORIZONTAL ASSEMBLY ABOVE. REFER TO DETAIL 12/A-2.

SYMBOLS LEGEND

- ROOM FINISH GROUPS (REFER TO SHEET A-0)
- ROOM NUMBER
- DOOR NUMBER (DOOR SCHEDULE SHEET A-4)
- NEW WORK KEY NOTES (SHEET A-1)
- WALL TYPE (SCHEDULE SHEET A-0)
- WINDOW TYPE (SHEET A-4)
- TOILET ACCESSORIES (SCHEDULE SHEET A-1)
- ELEVATION KEY NOTE (SHEET A-3)
- ROOF KEY NOTE (SHEET A-2)
- CEILING PLAN KEY NOTE (SHEETS A-1)
- SIGNAGE KEY NOTE (SHEETS A-4)
- SLOPE — FLOOR SLOPE. REFER TO STRUCTURAL DRAWINGS

SHERMAN CARTER BARNHART ARCHITECTS

NEW SPENCER COUNTY BUS GARAGE

TAYLORSVILLE, KENTUCKY

FIRST FLOOR PLAN, REFLECTED CEILING PLAN, ENLARGED FLOOR PLANS, AND DETAILS

JOB NO.	1745
DATE	11/25/19
DRAWN	ALC
CHECKED	ASC, BKL

COPYRIGHT © 2019
SHERMAN CARTER BARNHART ARCHITECTS, PLLC

REVISIONS

No.	Description	Date

SHEET

A-1

1745
NEW SPENCER COUNTY BUS GARAGE
12/16/2019 9:18:19 AM

ROOF LEGEND

□DS	PEMB DOWNSPOUT. TIE INTO BOOT @ 4'-0" A.F.F. REFER TO SITE DRAWINGS.
○VTR	VENT THRU ROOF, REFER TO PLUMBING DWGS. AND DETAIL 14/A-2.
CDS	PEMB CANOPY DOWNSPOUT. TIE INTO BOOT @ 4'-0" A.F.F. REFER TO SITE DRAWINGS.

ROOF KEY NOTES

1. PEMB GUTTER. REFER TO DETAILS.
2. PEMB CANOPY W/ INTEGRAL DOWNSPOUT TIE INTO BOOT. REFER TO DETAIL 8/A-2 AND SITE DRAWINGS.
3. ROOF ASSEMBLY TYPE 'A'. PEMB ROOF PANELS ON PEMB ROOF PURLINS.
4. PEMB RAKE TRIM.
5. PEMB RIDGE CAP.

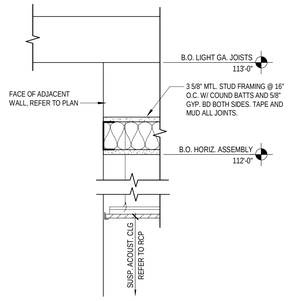

12 HORIZ. ASSEMBLY DETAIL
1 1/2" = 1'-0"

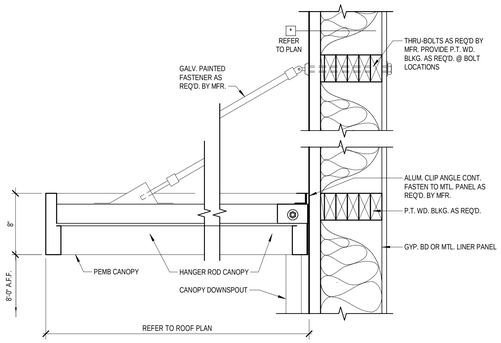

8 CANOPY DETAIL
1 1/2" = 1'-0"

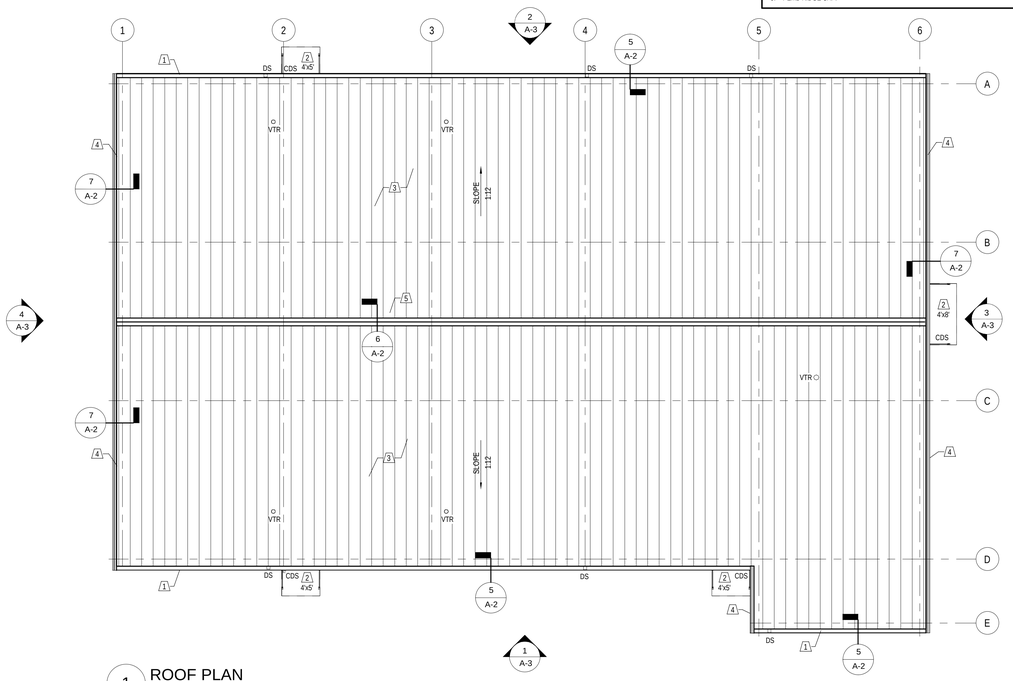

1 ROOF PLAN
1/8" = 1'-0"

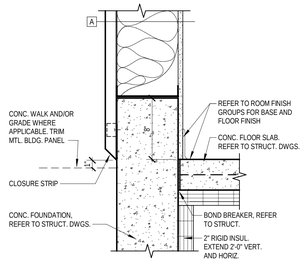

9 WALL BASE DETAIL @ MTL. STUD
1 1/2" = 1'-0"

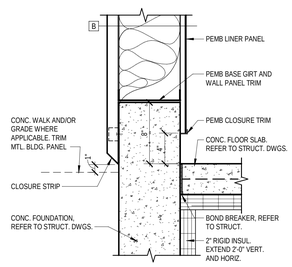

10 WALL BASE DETAIL @ GIRT
1 1/2" = 1'-0"

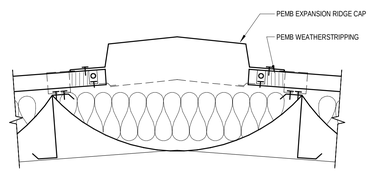

6 ROOF RIDGE DETAIL
1 1/2" = 1'-0"

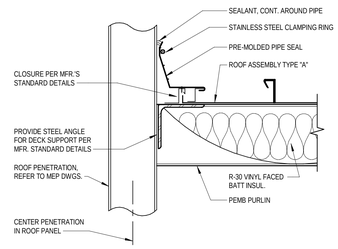

4 TYPICAL ROOF PENETRATION
1 1/2" = 1'-0"

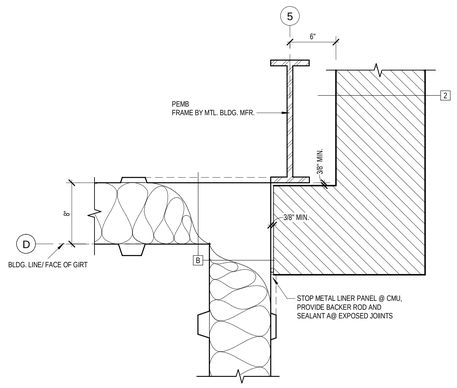

2 PLAN DETAIL
1 1/2" = 1'-0"

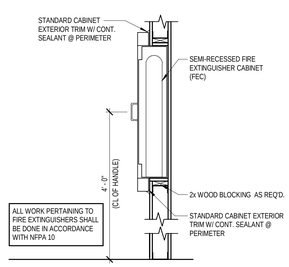

11 FIRE EXTINGUISHER CABINET DETAIL
3/4" = 1'-0"

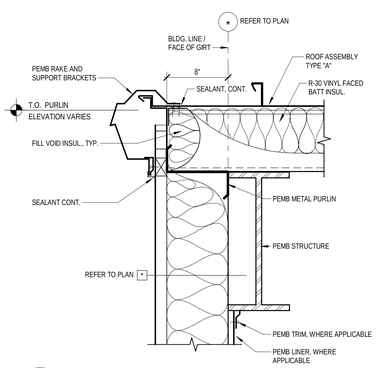

7 RAKE DETAIL @ GIRT
1 1/2" = 1'-0"

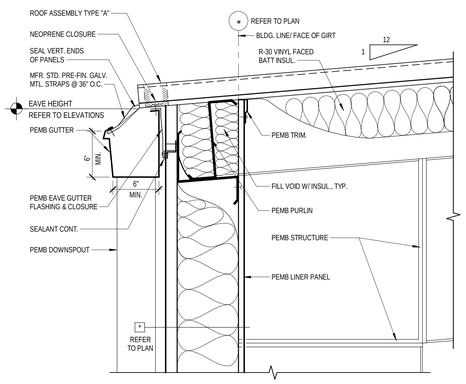

5 GUTTER DETAIL @ GIRT
1 1/2" = 1'-0"

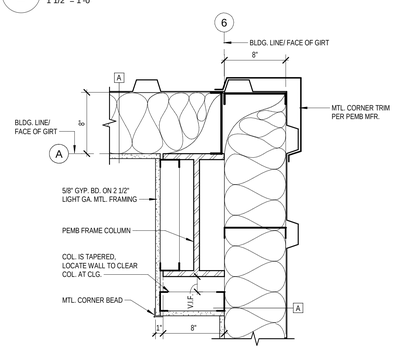

3 PLAN DETAIL
1 1/2" = 1'-0"

SHERMAN CARTER BARNHART ARCHITECTS

NEW SPENCER COUNTY BUS GARAGE

TAYLORSVILLE, KENTUCKY

ROOF PLAN AND DETAILS

JOB NO.	1745
DATE	11/25/19
DRAWN	ALC
CHECKED	ASC, BKL

COPYRIGHT © 2019 SHERMAN CARTER BARNHART ARCHITECTS, PLLC

REVISIONS

No.	Description	Date

SHEET

A-2

1745
NEW SPENCER COUNTY BUS GARAGE
12/16/2019 9:18:22 AM

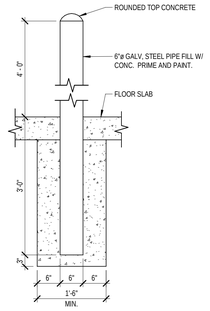

5 PIPE BOLLARD DETAIL (INTERIOR)
3/4" = 1'-0"

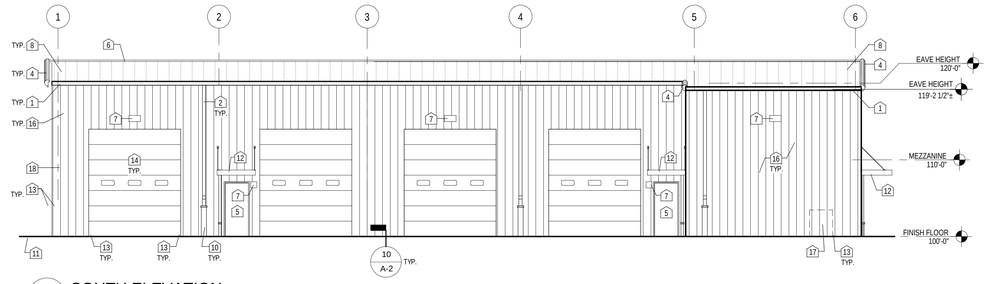

1 SOUTH ELEVATION
1/8" = 1'-0"

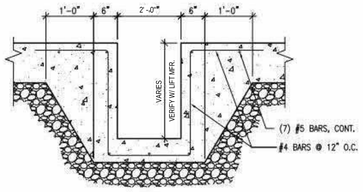

6 BUS PIT LIFT SECTION
3/4" = 1'-0"

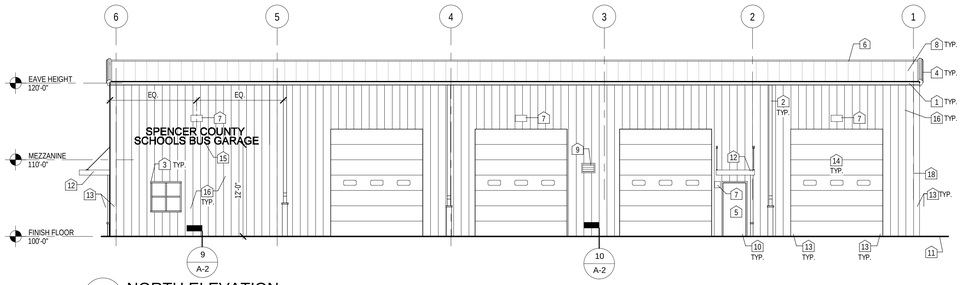

2 NORTH ELEVATION
1/8" = 1'-0"

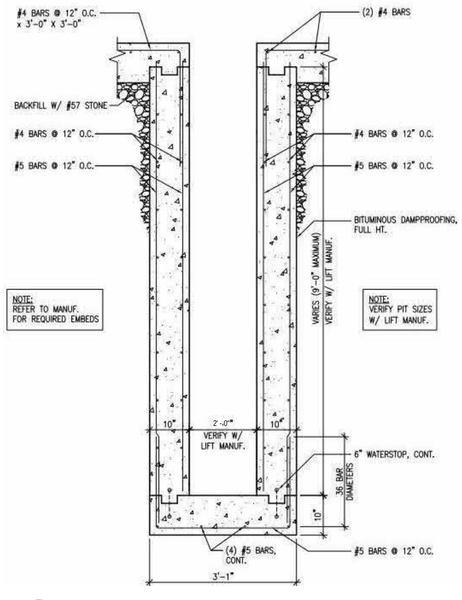

7 BUS PIT LIFT SECTION
3/4" = 1'-0"

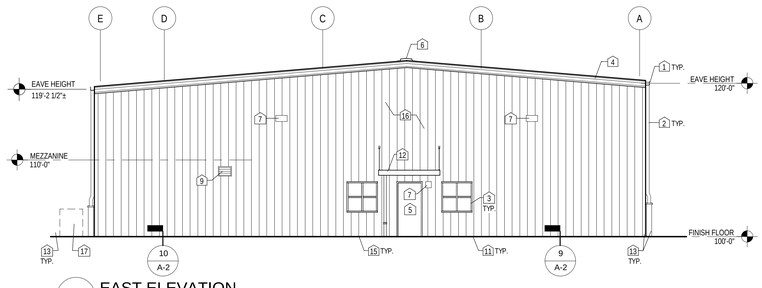

3 EAST ELEVATION
1/8" = 1'-0"

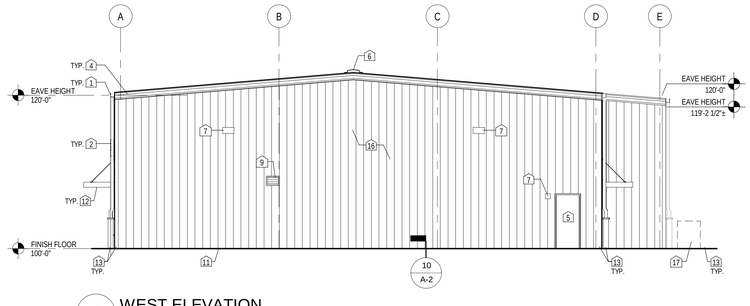

4 WEST ELEVATION
1/8" = 1'-0"

GENERAL ELEVATION NOTES

1. BUILDING ELEVATIONS SHOWN ON THIS DRAWING ARE INTENDED FOR GENERAL REFERENCE PUPOSES ONLY. REFER TO REFERENCED DETAILS FOR MORE FULLY DESCRIBED CONDITIONS AND REQUIREMENTS.
2. MATERIAL INDICATIONS AND DESCRIPTIONS, VERTICAL AND OTHER DIMENSIONS SHOWN ON ONE BUILDING ELEVATION APPLY TO OTHER BUILDING ELEVATIONS WHERE SHOWN, UNLESS NOTED OTHERWISE.
3. REFER TO FLOOR PLANS FOR LOCATION AND DOOR SCHEDULE FOR FULL EXTENT AND COMPLETE DESCRIPTION OF DOOR AND FRAME TYPES. PORTIONS OF DOORS, WINDOWS OR STOREFRONTS MAY BE CONCEALED BY OTHER BUILDING FEATURES SHOWN.
4. ALL EXPOSED EXTERIOR METAL SUCH AS FLASHINGS, GUTTERS AND DOWNSPOUTS SHALL RECEIVE THE SPECIFIED SHOP APPLIED FINISH COATING.
5. PORTIONS OF MECHANICAL / ELECTRICAL / PLUMBING ITEMS NOT SHOWN FOR CLARITY. REFER TO MECHANICAL / ELECTRICAL / PLUMBING DRAWINGS FOR ALL ITEMS.
6. LINES REPRESENTING PAVING AND FINISH GRADE ARE APPROXIMATE AND ARE SHOWN FOR REFERENCE PURPOSES ONLY. REFER TO SITE PLANS FOR SPECIFIC GRADE AND SPOT ELEVATIONS AT EACH RESPECTIVE LOCATION.
7. REFER TO SITE DRAWINGS FOR CONTINUATION OF PAVING, WALKS, ETC.

X ELEVATION KEY NOTES

1. PEMB GUTTER.
2. PEMB DOWNSPOUT.
3. PEMB WINDOW.
4. PEMB RAKE TRIM.
5. GALV. INSULATED H.M. DOOR AND FRAME (PAINT BY OWNER).
6. PEMB ROOF RIDGE CAP. REFER TO ROOF PLAN.
7. EXTERIOR LIGHT FIXTURE. REFER TO ELECTRICAL DWGS.
8. PEMB ROOF PANELS.
9. MECHANICAL LOUVER OR VENT. REFER TO MECHANICAL DRAWINGS.
10. DOWNSPOUT BOOT.
11. FINISH GRADE.
12. PEMB CANOPY W/ INTEGRAL DOWNSPOUT. REFER TO ROOF PLAN.
13. EXTERIOR CONC. FILLED PIPE BOLLARD (PAINT). REFER TO SITE DRAWINGS.
14. INSULATED OVERHEAD DOOR WITH GLASS LITES. REFER TO SPECS.
15. 1'-0" TALL DIMENSIONAL LETTERS.
16. PEMB WALL PANELS.
17. HVAC UNIT. REFER TO MECHANICAL DRAWINGS.

SHERMAN CARTER BARNHART ARCHITECTS

NEW SPENCER COUNTY BUS GARAGE

TAYLORSVILLE, KENTUCKY

BUILDING ELEVATIONS AND DETAILS

JOB NO.	1745
DATE	11/25/19
DRAWN	ALC
CHECKED	ASC, BKL

COPYRIGHT © 2019
SHERMAN CARTER BARNHART ARCHITECTS, PLLC

REVISIONS

No.	Description	Date

SHEET

A-3

1745
NEW SPENCER COUNTY BUS GARAGE
12/16/2019 9:18:24 AM

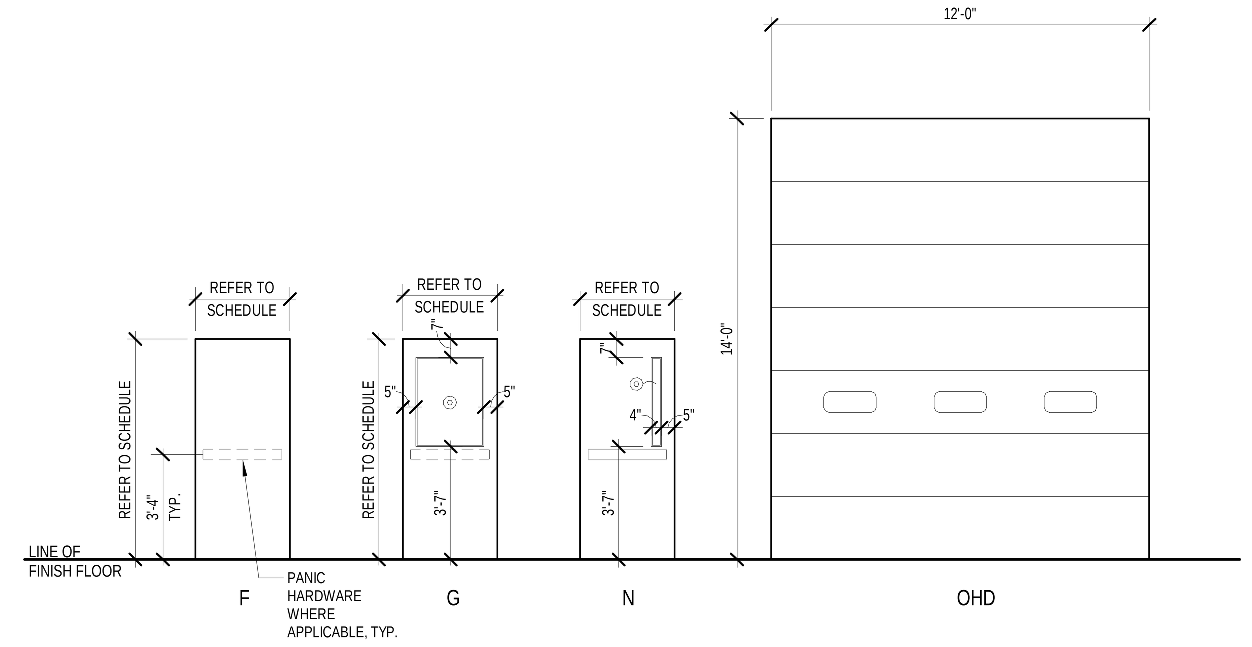

DOOR TYPES

1/4" = 1'-0"   ◎ DENOTES TEMPERED GLASS
ALL EXTERIOR GLAZING SHALL BE 1" INSULATED, U.N.O.

GLAZING NOTE: DIMENSIONS TO GLAZING EDGE NOTED ARE TO OUTERMOST EDGE AND DO NOT INCLUDE GLAZING TRIM

DOOR DIMENSIONS: DIMENSIONS NOTED ARE MINIMUM SIZES TO FACILITATE AND/OR CONCEAL PROJECT SPECIFIC HARDWARE, MFR. STANDARD DIMENSIONS WHICH NOMINALLY EXCEED THE MINIMUMS ARE ACCEPTABLE SUBJECT TO ARCHITECT REVIEW.

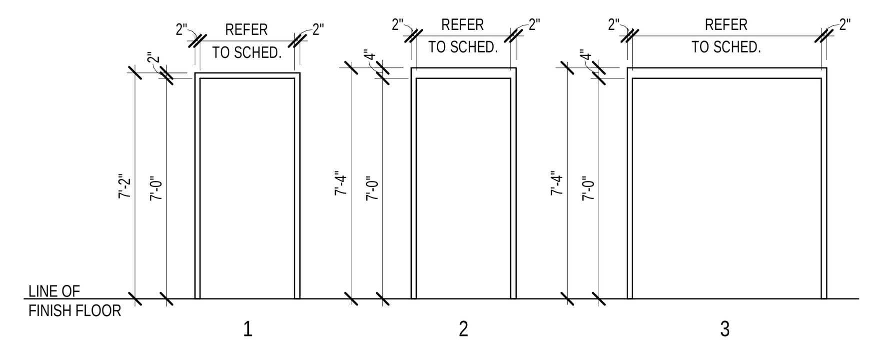

DOOR FRAME TYPES

1/4" = 1' - 0"

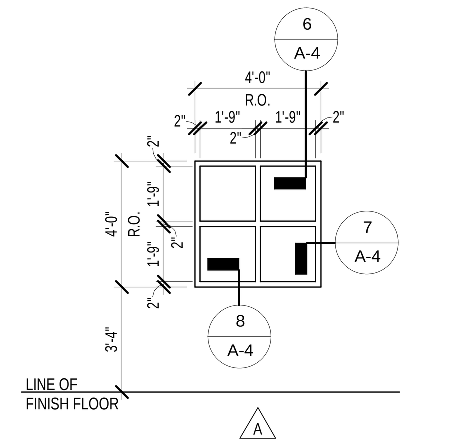

ALUMINUM WINDOW TYPE

1/4" = 1' - 0"

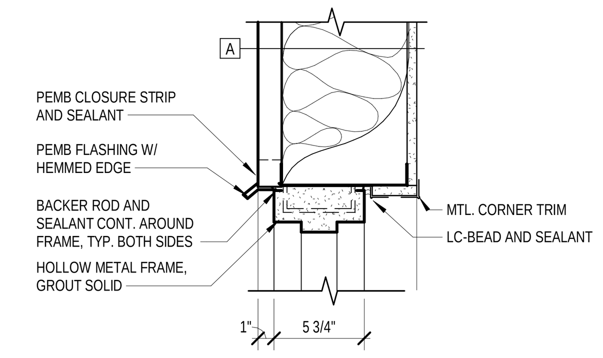

11 HM DOOR HEAD
1 1/2" = 1'-0"

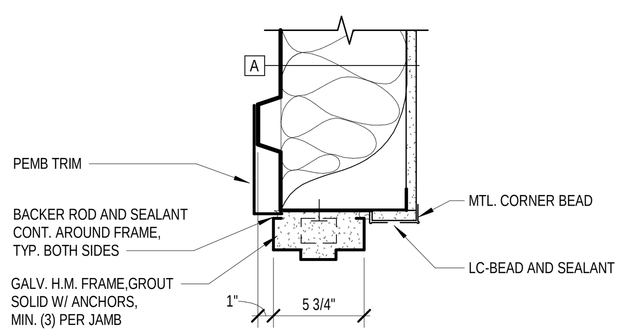

12 HM DOOR JAMB
1 1/2" = 1'-0"

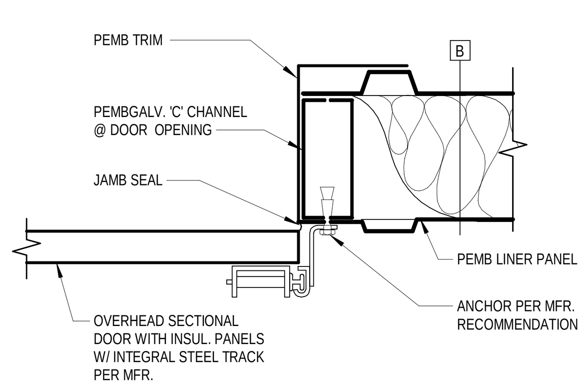

9 OVERHEAD DOOR JAMB
1 1/2" = 1'-0"

5 NOT USED
1 1/2" = 1'-0"

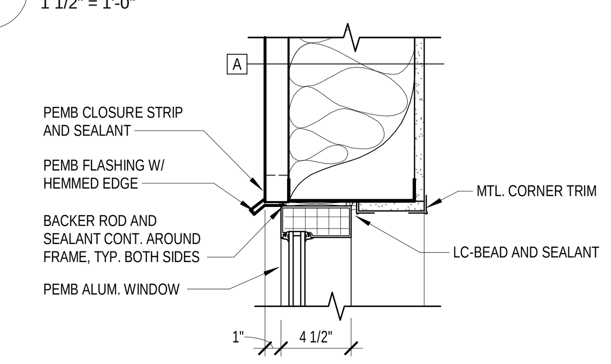

6 ALUM. WINDOW HEAD
1 1/2" = 1'-0"

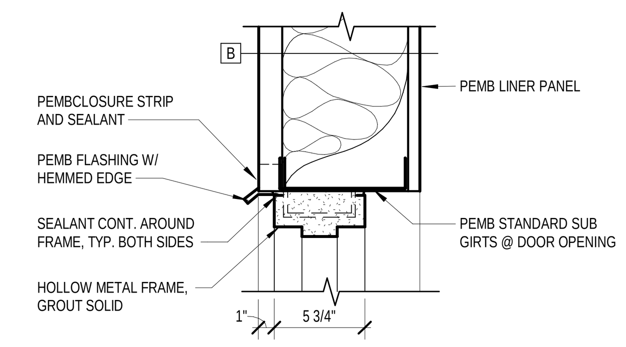

1 HM HEAD @ MTL. BLDG.
1 1/2" = 1'-0"

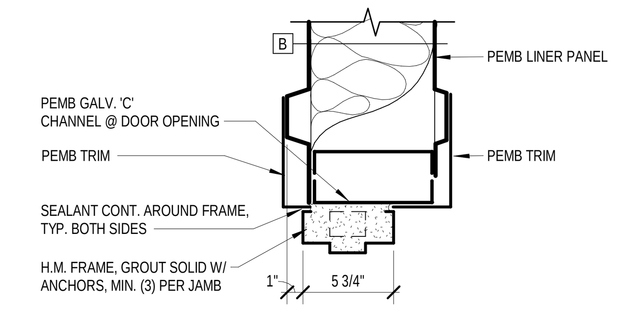

2 HM JAMB @ MTL. BLDG.
1 1/2" = 1'-0"

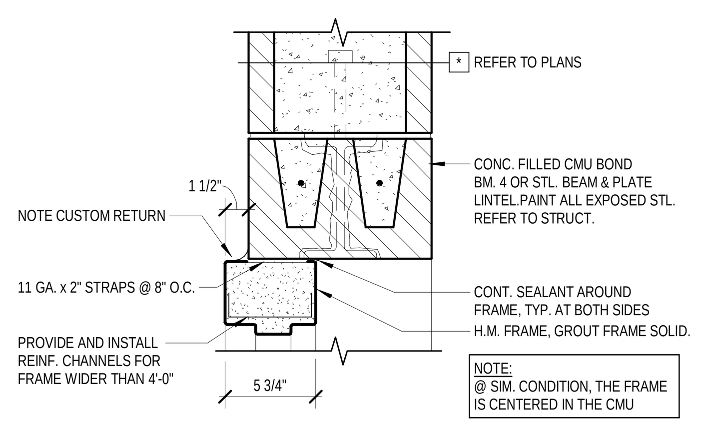

13 TYP. H.M. HEAD @ CMU 180° SWING
1 1/2" = 1'-0"

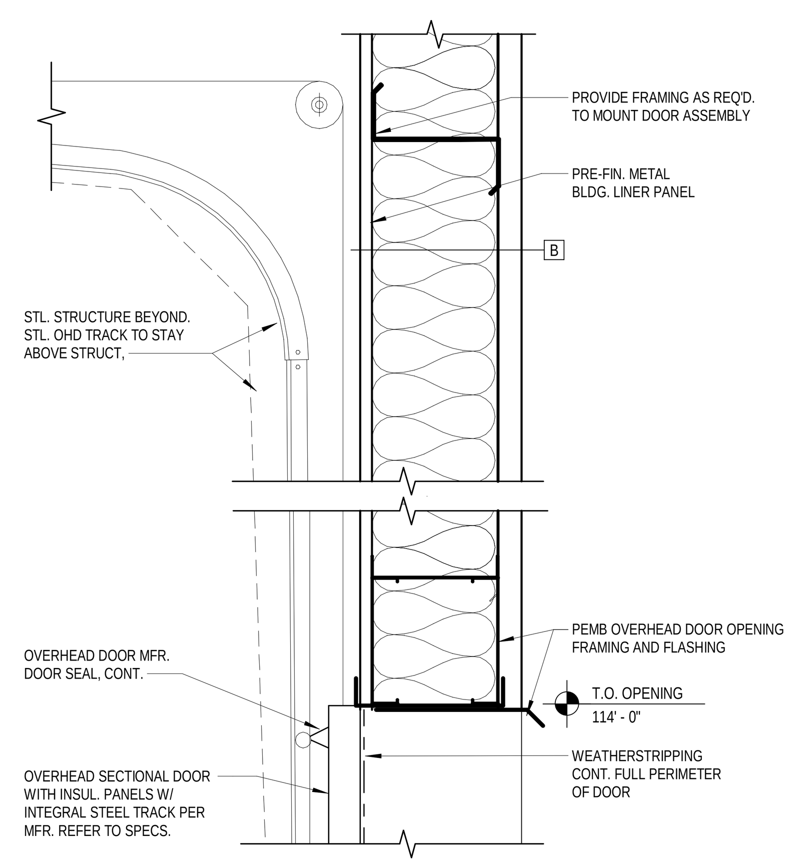

10 OVERHEAD DOOR HEAD
1 1/2" = 1'-0"

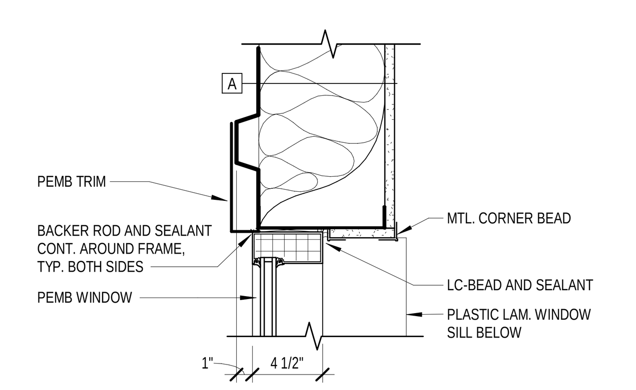

7 ALUM. WINDOW JAMB
1 1/2" = 1'-0"

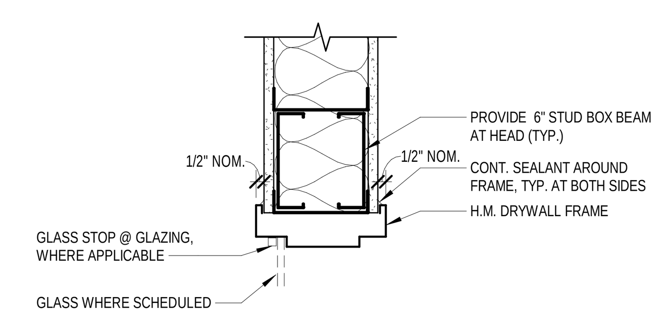

3 H.M. HEAD @ MTL. STUD
1 1/2" = 1'-0"

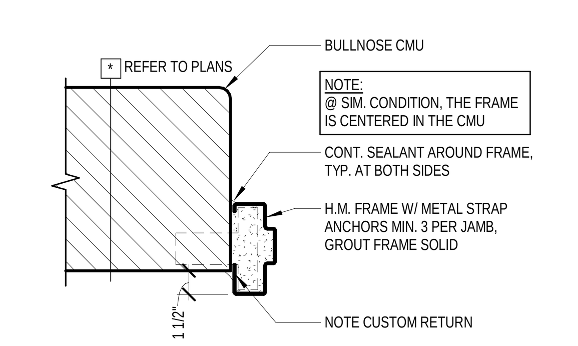

14 TYP. H.M. JAMB @ CMU 180° SWING
1 1/2" = 1'-0"

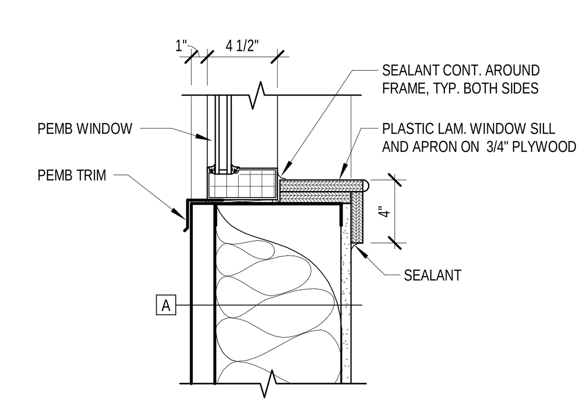

8 ALUM. WINDOW SILL
1 1/2" = 1'-0"

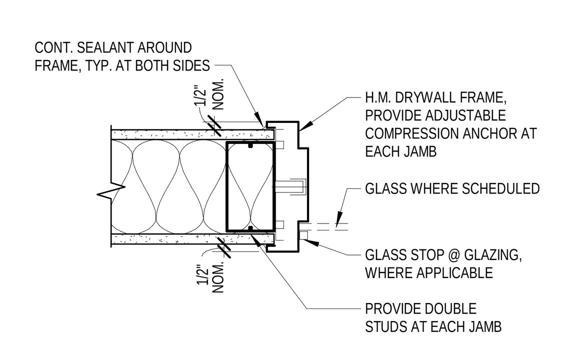

4 H.M. JAMB @ MTL. STUD
1 1/2" = 1'-0"

EXTERIOR DOOR SCHEDULE

	DOOR						FRAME						
NO.	LEAVES	LEAF W.	HEIGHT	MATERIAL	TYPE	GLAZING	MATERIAL	TYPE	GLAZING	HEAD	JAMB	CLOSER°	REMARKS
E100A	1	3' - 0"	7' - 0"	HM	F	-	HM	1	-	1/A-4	2/A-4	105	1, 2, 3, 4, 5
E100B	MFR.	12' - 0"	14' - 0"	INSUL. MTL.	OHD	MFR.	STL.	MFR.	-	10/A-4	9/A-4	-	1,2, 3, 6
E100C	MFR.	12' - 0"	14' - 0"	INSUL. MTL.	OHD	MFR.	STL.	MFR.	-	10/A-4	9/A-4	-	1,2, 3, 6
E100D	MFR.	12' - 0"	14' - 0"	INSUL. MTL.	OHD	MFR.	STL.	MFR.	-	10/A-4	9/A-4	-	1,2, 3, 6
E100E	1	3' - 0"	7' - 0"	HM	F	-	HM	1	-	1/A-4	2/A-4	105	1, 2, 3, 4, 5
E100F	MFR.	12' - 0"	14' - 0"	INSUL. MTL.	OHD	MFR.	STL.	MFR.	-	10/A-4	9/A-4		1,2, 3, 6
E100G	MFR.	12' - 0"	14' - 0"	INSUL. MTL.	OHD	MFR.	STL.	MFR.	-	10/A-4	9/A-4		1,2, 3, 6
E100H	MFR.	12' - 0"	14' - 0"	INSUL. MTL.	OHD	MFR.	STL.	MFR.	-	10/A-4	9/A-4		1,2, 3, 6
E100J	1	3' - 0"	7' - 0"	HM	F	-	HM	1	-	1/A-4	2/A-4	105	1, 2, 3, 4, 5
E105	MFR.	3' - 0"	7' - 0"	HM	G	1" INSUL.	HM	1	-	11/A-4	12/A-4	105	1, 2, 3, 4, 5
E108A	MFR.	12' - 0"	14' - 0"	INSUL. MTL.	OHD	MFR.	STL.	MFR.	-	10/A-4	9/A-4		1,2, 3, 6
E108B	MFR.	12' - 0"	14' - 0"	INSUL. MTL.	OHD	MFR.	STL.	MFR.	-	10/A-4	9/A-4		1,2, 3, 6
E108C	1	3' - 0"	7' - 0"	HM	F	-	HM	1	-	1/A-4	2/A-4	105	1, 2, 3, 4, 5

INTERIOR FLOOR DOOR SCHEDULE

	DOOR						FRAME			REFER TO A8.2 FOR TYPICAL DETAILS			
NO.	LEAVES	LEAF W.	HEIGHT	MATERIAL	TYPE	GLAZING	MATERIAL	TYPE	GLAZING	HEAD	JAMB	CLOSER°	REMARKS
100A	1	3' - 0"	7' - 0"	HM	F	-	HM	1	-	1/A-4	2/A-4	105	1, 2, 3, 4
100B	1	3' - 0"	7' - 0"	HM	F	-	HM	1	-	1/A-4	2/A-4	105	1, 2, 3, 4
101	1	3' - 0"	7' - 0"	HM	F	-	HM	2	-	13/A-4 SIM.	14/A-4 SIM.	90	2
102	1	3' - 0"	7' - 0"	HM	N	1/4"	HM	1	-	3/A-4	4/A-4	-	
103	1	3' - 0"	7' - 0"	HM	F	-	HM	1	-	3/A-4	4/A-4	-	
104A	1	3' - 0"	7' - 0"	HM	G	1/4"	HM	2	-	13/A-4 SIM.	14/A-4 SIM.	90	2
104B	1	3' - 0"	7' - 0"	HM	N	1/4"	HM	1	-	3/A-4	4/A-4	-	
105	1	3' - 0"	7' - 0"	HM	F	-	HM	2	-	13/A-4 SIM.	14/A-4 SIM.	90	2
106	1	3' - 0"	7' - 0"	HM	F	-	HM	1	-	3/A-4	4/A-4	90	
107	1	3' - 0"	7' - 0"	HM	F	-	HM	1	-	3/A-4	4/A-4	90	
108	1	3' - 0"	7' - 0"	HM	N	1/4"	HM	2	-	13/A-4 SIM.	14/A-4 SIM.	-	
109	2	3' - 4"	7' - 0"	HM	F	-	HM	3	-	13/A-4	14/A-4	-	7, 8

REMARKS

1. GALVANIZED DOOR AND FRAME
2. INSULATED DOOR AND FRAME
3. PROVIDE MFR. STANDARD DETAILS AT DOOR AND, COORD. W/ PEMB MFR.
4. PROVIDE EXTERIOR DOOR THRESHOLD
5. PANIC DEVICE
6. POWER OPERATED
7. ONE LEAF FLUSH BOLT
8. MANUAL HOLD OPEN DEVICE

GENERAL FRAME NOTES

GENERAL DOOR NOTES:

A. 1/8" MAX UNDERCUT FROM BOTTOM OF DOOR TO TOP OF THRESHOLD AT EXTERIOR DOORS. DOOR MUST COMPRESS WEATHER STRIP IN THRESHOLD.
B. PROVIDE THRESHOLDS AS REQ'D AT DOORS. SEE TYPICAL DETAILS ON THIS SHEET
C. ALL EXTERIOR DOORS/FRAMES TO BE INSULATED.

GENERAL GLASS AND GLAZING NOTES:

A. PROVIDE FULLY TEMPERED GLASS WHERE INDICATED.

GENERAL HARDWARE NOTE:

A. PROVIDE AND INSTALL ALL HARDWARE IN ACCORDANCE WITH APPLICABLE ARTICLES OF "THE AMERICANS WITH DISABILITIES ACT (ADA)".
B. HARDWARE CLOSERS ON SCHEDULE NOTED FOR BUILDING CODE AND KDE REQUIREMENTS. REFER TO HARDWARE SPECIFICATION FOR ADDITIONAL CLOSERS USED FOR HARDWARE FUNCTION.
C. DOOR HARDWARE HEIGHTS SHALL BE RELATIVE TO FLOOR ELEVATION, NOT BOTTOM OF DOOR.

GENERAL ALUMINUM FRAME / WINDOW NOTES:

A. CONTRACTOR TO COORD. WORK WITH ASSOCIATED TRADES (FRAMING, MASONRY, ETC.) TO CONFIRM ALL DIMENSIONS.
B. ALL EXTERIOR GLAZING IS TO BE 1" INSULATED U.N.O.
C. CONTRACTOR TO PROVIDE ALL ACCESSORY ITEMS NECESSARY TO INSTALL WINDOWS.
D. PROVIDE MFR. STANDARD ACCESSORIES AND DETAILS FOR A COMPLETE INSTALLATION.
E. PROVIDE RIGID INSULATION INSERTS IN PERIMETER FRAMES OF ALL EXTERIOR ALUMINUM FRAMES, WINDOWS AND STOREFRONT. IN ADDITION, PROVIDE SHIMS, FILL ALL SHIM VOIDS AT EXTERIOR FRAME OPENINGS W/ FIRE RATED LOW EXPANSION SPRAY FOAM INSULATION.
F. DO NOT BLOCK WEEPS W/ SEALANT
G. CONTRACTOR SHALL COORDINATE OPENINGS AND ASSOCIATED FRAMING TO CONFIRM ALL DIMENSIONS. INSTALLER/ FABRICATOR SHALL ACCOUNT FOR SHIMS, DEFLECTION, ETC.
H. PROVIDE DEFLECTION TRACKS AS REQUIRED.
J. PROVIDE CONCEALED STEEL REINFORCEMENT AT ALL DOOR CLOSER AND EXIT DEVICE LOCATIONS AND AS REQUIRED BY FABRICATOR TO ACCOMMODATE WIND LOADING AND OTHER STRUCTURAL CONSIDERATIONS.
K. PROVIDE BACKER ROD AND SEALANT CONT. AT FRAME PERIMETER, BOTH SIDES.
L. PEMB MANUFACTURER TO PROVIDE STANDARD MANUFACTURER'S DETAILS AT FRAME HEAD, JAMB AND SILL (WHERE APPLICABLE) FOR WEATHERTIGHT CONDITION.

GENERAL HOLLOW METAL FRAME NOTES:

A. PROVIDE REINFORCING CHANNEL IN FRAME HEAD AT ALL H.M. FRAMES WHERE TOTAL FRAME WIDTH IS GREATER THAN 4 FT.
B. PROVIDE 11 GA. X 2" WIDE STRAPS AT 8" O.C. IN H.M. FRAME HEADS GREATER THAN 2" IN HEIGHT, TYPICAL.
C. FILL H.M. FRAME AND JAMB SOLID WITH CONC. GROUT, TYPICAL AT MASONRY WALLS.
D. PROVIDE MINIMUM THREE ANCHORS PER JAMB, TYPICAL AT MASONRY WALLS.
E. CAULK ALL JOINTS WITH MINIMUM 1/4" SEALANT BEAD CONTINUOUS WHERE FRAME MEETS OTHER WALL MATERIALS.
F. PROVIDE GALVANIZED STEEL FRAME AND LINTEL COMPONENTS AT ALL NON-ALUMINUM EXTERIOR OPENINGS, TYPICAL AND FIELD PAINT.
G. LINTEL BEAM AND LINTEL ANGLE LENGTH SHALL BE M.O. PLUS 16" (MIN. 8" BEARING EACH END UNO.) LINTEL PLATE LENGTH SHALL BE M.O. LESS 1/4" (1/8" AT EACH END.) REFER TO STRUCTURAL DRAWINGS.
H. CONTRACTOR SHALL RAKE ALL MORTAR JOINTS 1/2" AT EXTERIOR STL. LINTEL BEARING LOCATIONS AND PROVIDE SEALANT TO MATCH MORTAR.
J. PROVIDE MFR STANDARD DETAILS @ DOORS & FRAMES.
K. ALL PAINT, N.I.C., BY OWNER
L. PEMB MANUFACTURER TO PROVIDE STANDARD MANUFACTURER'S DETAILS AT FRAME HEAD, JAMB AND SILL (WHERE APPLICABLE) FOR WEATHERTIGHT CONDITION.

TYPICAL THRESHOLD CONDITIONS

GENERAL NOTES:

1. REFER TO ROOM FINISH GROUPS FLOOR FINISHES. IT IS THE CONTRACTOR'S RESPONSIBILITY TO INSURE THAT THE PROPER THRESHOLD IS USED.
2. PROVIDE RESILIENT TRANSITION STRIPS OR REDUCERS BETWEEN ALL DIFFERING FLOOR FINISH MATERIALS.
3. PROVIDE STRIP OR REDUCER PROFILE AS RECOMMENDED BY MANUFACTURER FOR APPLICATION.

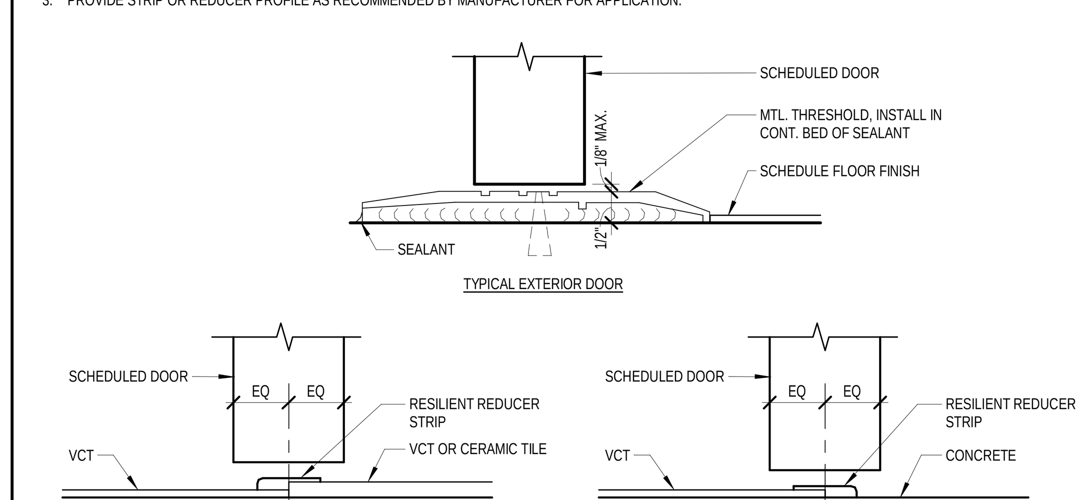

SHERMAN CARTER BARNHART ARCHITECTS

NEW SPENCER COUNTY BUS GARAGE

TAYLORSVILLE, KENTUCKY

DOOR SCHEDULE AND DETAILS

JOB NO.	1745
DATE	11/25/19
DRAWN	ALC
CHECKED	ASC, BKL

COPYRIGHT © 2019 SHERMAN CARTER BARNHART ARCHITECTS, PLLC

REVISIONS

No.	Description	Date

SHEET

A-4

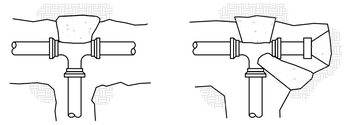

CONCRETE THRUST BLOCK AREAS				
PIPE SIZE	TEES & DEAD ENDS	90° BEND	45° BEND	22 1/2° BEND
4"&<	1 S.F.	1.5 S.F.	1 S.F.	0.5
6"	2 S.F.	3 S.F.	2 S.F.	1 S.F.
8"	4 S.F.	5 S.F.	3 S.F.	1.5 S.F.
12"	8 S.F.	9 S.F.	7 S.F.	2.5 S.F.

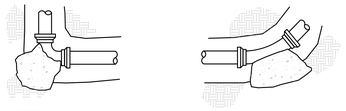

NOTES:

1. BLOCKING SHALL BE 2,500 PSI CONCRETE (MINIMUM) AND BE PLACED AGAINST UNDISTURBED EARTH, TYPICAL.
2. WRAP 4 MIL. PLASTIC AROUND ALL FITTING BOLTS PRIOR TO PLACING CONCRETE BLOCKING.
3. REFER TO PLAN VIEWS FOR PIPE SIZES.

THRUST BLOCK DETAIL

NOT TO SCALE

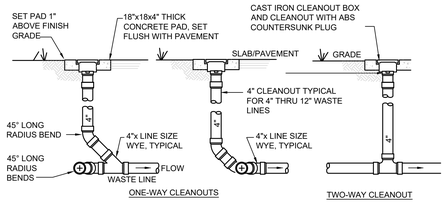

NOTE: CLEANOUTS IN STRAIGHT RUNS OF PIPING SHALL BE TWO-WAY TYPE CLEANOUTS, UNLESS OTHERWISE SHOWN AND OR NOTED.

SANITARY SEWER CLEANOUT DETAIL

NOT TO SCALE

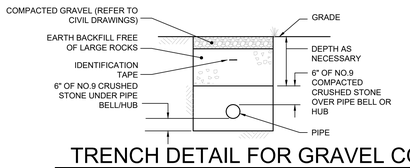

TRENCH DETAIL FOR GRAVEL COVER

NOT TO SCALE

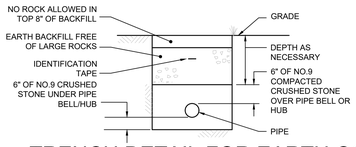

TRENCH DETAIL FOR EARTH COVER

NOT TO SCALE

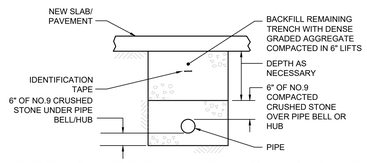

TRENCH DETAIL NEW SLAB/PAVEMENT

NOT TO SCALE

1 PLUMBING SITE UTILITIES PLAN

SCALE: 1"=30'-0"

0 30' 60'

"KY BUD" BEFORE YOU DIG: (811)

UNDERGROUND UTILITY LOCATIONS WERE DETERMINED FROM SITE SURVEY AND VISUAL INSPECTION OF THE PROPERTY AND SHOULD BE CONSIDERED APPROXIMATE ONLY. CONTACT ALL INDIVIDUAL UTILITY COMPANIES AND "KY BUD" PRIOR TO BEGINNING ANY EXCAVATION.

Kentucky 811

UTILITY CONTACT INFORMATION	
CITY OF TAYLORSVILLE HAROLD COMPTON -	PHONE: (502) 477-3235
SPENCER COUNTY HEALTH DEPARTMENT JUSTIN JUMP -	PHONE: (502) 477-2890

SHEET KEYNOTES:

1. CONNECT NEW 2½"CW TO EXISTING 12"CW. FIELD VERIFY LOCATION AND DEPTH. COORDINATE ALL WORK WITH *CITY OF TAYLORSVILLE WATER*.
2. NEW WATER METER PIT.
3. REMOVE EXISTING WATER METE AND PIT.
4. CONNECT NEW 1½"CW TO EXISTING FIELD VERIFY LOCATION.
5. COORDINATE ROUTE AND DEPTH WITH EXISTING UTILITIES.
6. 2,500 GALLON BURIED STORAGE TANK WITH HEAVY DUTY H-20 RATED MANWAY. INSTALL FLOAT SYSTEM SET TO ALARM AT 80% OF VOLUME. INSTALL CONTROL PANEL WITH VISIBLE AND AUDIO ALARM IN WASH BAY. REFER TO DRAWING P1 FOR PANEL LOCATION.
7. TWO 1,000 GALLON SEPTIC TANK IN SERIES.
8. DISTRIBUTION VAULT.
9. INTERLOCKING LEACHING CHAMBERS.

SITE UTILITY GENERAL NOTES

1. THE UTILITIES ARE SHOWN ON THE DRAWINGS AS ACCURATELY AS THEY HAVE BEEN PROVIDED TO THE ARCHITECT/ENGINEER. THEIR LOCATIONS ARE NOT GUARANTEED. IT IS THE CONTRACTORS RESPONSIBILITY TO CONTACT ALL UTILITY COMPANIES AND TO HAVE ALL UTILITIES FIELD LOCATED, PRIOR TO STARTING CONSTRUCTION. THE UTILITIES SHOWN REPRESENT OBSERVABLE FEATURES ALONG WITH INFORMATION PROVIDED BY THE RESPECTIVE UTILITY COMPANIES, AND IS THEREFORE NOT WARRANTED. PRIOR TO CONSTRUCTION THE CONTRACTOR IS TO FIELD VERIFY ALL UTILITY LOCATIONS, SIZES, TYPE ETC. NEEDED TO COMPLETE THE WORK OF THE CONTRACT.
2. THE CONTRACTOR SHALL NOTIFY THE ARCHITECT/ENGINEER IF A PROBLEM COULD EXIST. IF THE CONTRACTOR PROCEEDS WITHOUT CONTACTING THE UTILITY COMPANIES AND DOES NOT NOTIFY THE ARCHITECT/ENGINEER OF POTENTIAL PROBLEMS HE DOES SO AT HIS OWN RISK.
3. ALL CONTRACTORS SHALL BE REQUIRED TO VISIT THE SITE PRIOR TO SUBMITTING A BID ON THE PROJECT. CHANGE ORDERS FOR DEMOLITION, RENOVATION OR BUILDING ADDITIONS OF ITEMS READILY NOTICEABLE OR REASONABLY INFERRED BY SITE OBSERVATION SHALL NOT BE CONSIDERED.
4. PRIOR TO TERMINATION AND REMOVAL OF UTILITIES, THE CONTRACTOR SHALL VERIFY THESE UTILITIES ARE NOT SERVING AREAS OUTSIDE THE DEMOLITION/NEW WORK LIMITS. IF ANY OF THESE UTILITIES ARE SERVING AREAS OUTSIDE THE DEMOLITION/NEW WORK LIMITS, THE CONTRACTOR SHALL NOT REMOVE ANY OF THESE UTILITIES. NOTIFY THE ARCHITECT/ENGINEER SO COORDINATION AND CLARIFICATION CAN OCCUR.
5. THE CONTRACTOR SHALL HAVE THE UTILITY COMPANY LOCATE THE BURIED LINES.
6. AREAS OUTSIDE THE DEMOLITION/NEW WORK LIMITS HAVE OCCUPIED BUILDINGS. ALL NECESSARY CARE SHALL BE TAKEN BY THE CONTRACTOR TO ENSURE THE SAFETY OF THE RESIDENTS, AND ADJACENT PROPERTY.
7. PROVIDE NECESSARY PRECAUTIONS TO AVOID DAMAGE TO EXISTING STRUCTURES THAT REMAIN IN PLACE, TO BE REUSED OR TO REMAIN THE PROPERTY OF THE OWNER. ANY DAMAGED ITEMS SHALL BE REPAIRED OR REPLACED AT NO ADDITIONAL COST.
8. ALL EXCESS DEMOLITION DEBRIS SHALL BE REMOVED FROM THE SITE AND DISPOSED OF LEGALLY IN A LANDFILL APPROVED BY AN AGENCY HAVING JURISDICTION.
9. THE CONTRACTOR SHALL TAKE NECESSARY PRECAUTIONS NOT TO DAMAGE EXISTING PAVING, SIDEWALKS AND CURBS WHERE NOTED TO REMAIN. IF THE PAVING, SIDEWALKS AND/OR CURBS ARE DAMAGED, THE CONTRACTOR SHALL REPAIR THEM PER THE SPECIFICATIONS OF AUTHORITIES HAVING JURISDICTION.
10. THE CONTRACTOR SHALL BE RESPONSIBLE FOR OBTAINING AND PAYING THE COST OF ALL PERMITS AND FEES REQUIRED BY AUTHORITIES HAVING JURISDICTION OVER THE PROJECT. THE CONTRACTOR SHALL PAY FOR ALL HIGHWAY FEES, UTILITY SERVICE FEES (PLUMBING, ELECTRICAL, SANITARY TAP, ETC.), FOR ALL RELOCATION COSTS AND/OR RELOCATION FEES, AND FOR ALL DAMAGES TO SIDEWALKS, STREETS AND/OR OTHER PUBLIC PROPERTY.
11. WHERE PAVEMENT, WALKS, ETC. ARE TO BE DEMOLISHED, SAWCUT EDGE AT ALL AREAS ADJACENT TO ITEMS INDICATED TO REMAIN TO PROVIDE CLEAN, STRAIGHT EDGE.
12. PROVIDE APPROVED PROTECTION AND COORDINATE INSTALLATION OF TEMPORARY SERVICES OR CONNECTION FOR ELECTRICAL AND MECHANICAL UTILITIES.

SHERMAN CARTER BARNHART ARCHITECTS

STATE OF KENTUCKY NICHOLAS MORGAN CLEVENGER LICENSED PROFESSIONAL ENGINEER 12/12/2019

SHROUT TATE WILSON MECHANICAL AND ELECTRICAL ENGINEERS
Lexington - Louisville
www.stweng.com

NEW SPENCER COUNTY BUS GARAGE

TAYLORSVILLE, KENTUCKY

PLUMBING SITE UTILITIES PLAN

JOB NO.	1745
DATE	12/16/2019
DRAWN	MM
CHECKED	NM

COPYRIGHT © 2019
SHERMAN CARTER BARNHART ARCHITECTS, PLLC

REVISIONS

No.	Description	Date

SHEET

U1

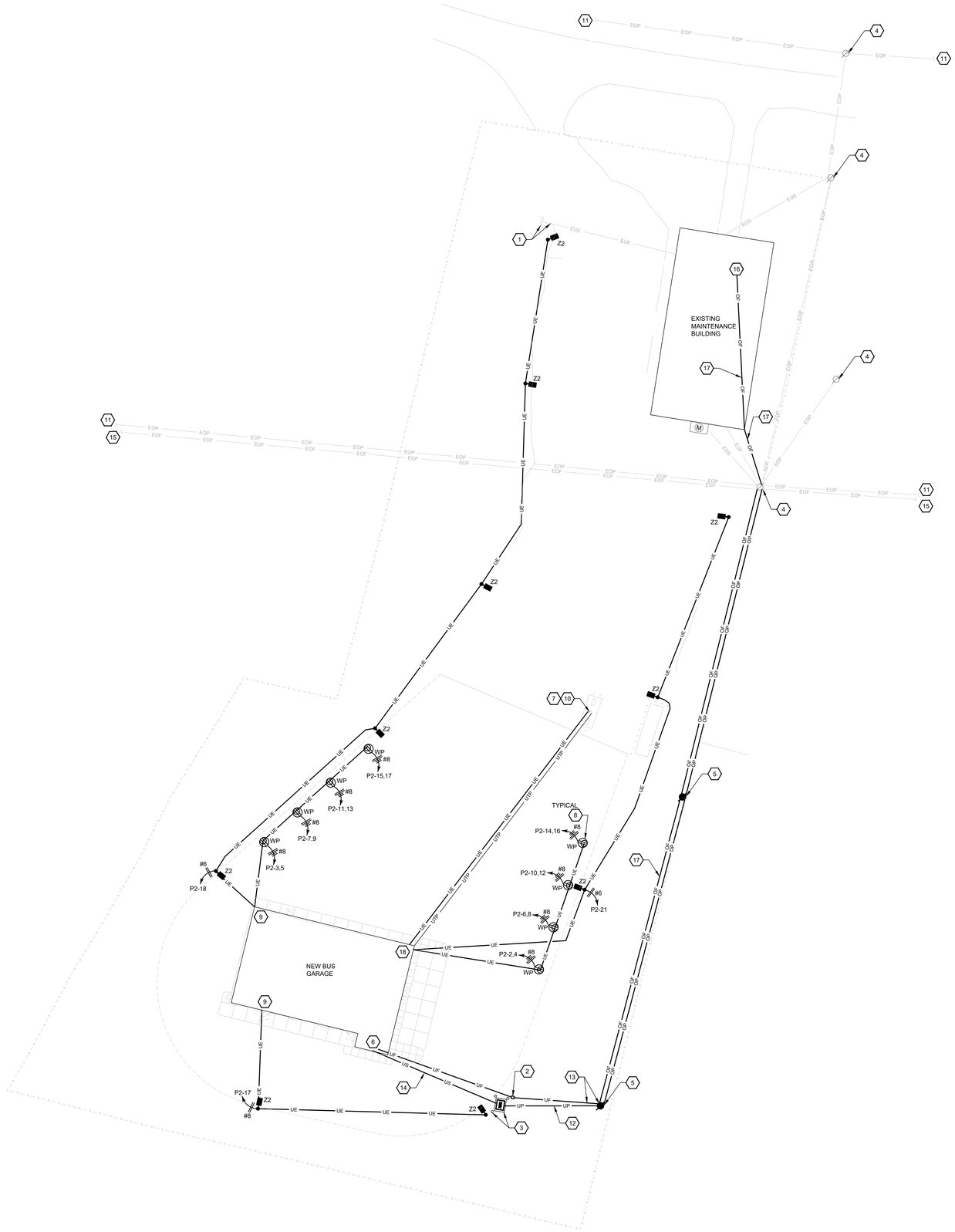

1 ELECTRICAL SITE UTILITIES PLAN

SCALE: 1"=30'-0"

0 30' 60'

GENERAL NOTES:

1. REFER TO GENERAL NOTES ON SHEET E2.

⬡ SHEET KEYNOTES:

1. EXISTING UNDERGROUND ELECTRIC TO SEPTIC LEACH FIELD ALARM PANEL TO REMAIN.
2. PROVIDE IN-GRADE PULLBOX FOR DISTRICT FIBER. PULL-BOX TO BE POLYMER CONCRETE TYPE, 11"W, 18"L, 12"D, LOAD RATING TIER 5, PG STYLE, WITH LABELED COVER THAT READS "FIBER", AS MANUFACTURED BY QUAZITE OR EQUAL.
3. LOCATION OF SALT RIVER ELECTRIC UTILITY PADMOUNT TRANSFORMER. PROVIDE CONCRETE PAD PER UTILITY REQUIREMENTS AND COORDINATE TRANSFORMER INSTALLATION WITH UTILITY. PROVIDE (3) CONCRETE FILLED STEEL BOLLARDS AT CORNERS OF TRANSFORMER AS INDICATED ON PLANS. REFER TO ARCHITECURAL PIPE BOLLARD DETAIL AND COORDINATE BOLLARD PAINT COLOR WITH ARCHITECT.
4. EXISTING UTILITY RISER POLE TO REMAIN.
5. NEW RISER POLE, BY UTILITY.
6. SITE UTILTIES ENTER BUILDING UNDERGROUND INTO MAINTENANCE 109 ROOM.
7. PROVIDE (1) 2"C FOR ELECTRIC AND (1) 2"C FOR DATA ROUGH-IN FOR OWNER PROVIDED FUELING STATION. COORDINATE EXACT LOCATION WITH OWNER FUELING VENDOR.
8. PEDESTAL RECEPTACLE ON POLE BASE FOR BUS BLOCK HEATERS. EACH PEDESTAL TO HAVE TWO ELECTRICAL CIRCUITS. REFER TO DETAIL ON SHEET E3 FOR MORE INFORMATION. COORDINATE EXACT LOCATION WITH CIVIL DRAWINGS FOR BUS PARKING. PEDESTAL TO BE PLACED BETWEEN BUS PARKING SPACES, TYPICAL.
9. UNDERGROUND ELECTRIC TO STUB OUT IN CORNER OF SPACES, TIGHT TO WALL.
10. PROVIDE A 120V, WEATHER PROOF, EMERGENCY STOP BUTTON AT FUELING STATION. EMERGENCY STOP BUTTON TO BE POWERED FROM A UN-SWITCHED 120V CONTROL CIRCUIT. UPON ACTIVATION, EMERGENCY STOP BUTTON SHALL TRIP SHUNT TRIP CIRCUIT BREAKER FEEDING FUEL PUMPS. EMERGENCY STOP BUTTON TO BE LABELED "EMERGENCY GAS SHUT-OFF" WITH LAMACOID LABEL.
11. EXISTING OVERHEAD UTILITY LINES CONTINUE THIS DIRECTION.
12. PROVIDE (2) 4", SCHEDULE 40, PVC CONDUITS WITH PULL STRINGS FOR PRIMARY CONDUCTORS TO BE PULLED BY LOCAL UTILITY. ELBOWS TO BE SCHEDULE 80 PVC, UTILIZE LONG SWEEPS, 42" MINIMUM BURY. COORDINATE INSTALLATION WITH UTILITY.
13. DISTRICT FIBER TO TRANSITION FROM OVERHEAD TO UNDERGROUND AT THIS LOCATION AND ROUTE UNDERGROUND INTO BUS GARAGE. PROVIDE (1) 3", SCHEDULE 40, PVC CONDUIT FROM RISER POLE TO MAINTENANCE 109 (REFER TO NOTE 5 SHEET E1 FOR LOCATION).
14. REFER TO POWER ONE-LINE DIAGRAM, SHEET E4, FOR SECONDARY INFORMATION. PROVIDE 36" MINIMUM BURY.
15. EXISTING OVERHEAD SCHOOL DISTRICT FIBER LINE CONTINUE THIS DIRECTION.
16. APPROXIMATE LOCATION OF EXISTING MAINTENANCE BUILDING IDF.
17. PROVIDE NEW DISTRICT FIBER FROM IDF LOCATED IN EXISTING MAINTENANCE BUILDING TO NEW BUS GARAGE. FIBER OPTIC CABLE TO BE, 6 STRAND, MULTI-MODE, INDOOR/OUTDOOR RATED, PLENUM RATED, ARMORED.
18. ELECTRICAL CONDUITS TO ROUTE CONCEALED IN STEEL BEAM CHASE IN THIS CORNER OF BUILDING TO ABOVE ACCESSIBLE CEILING.

SHERMAN CARTER BARNHART ARCHITECTS

SHROUT TATE WILSON MECHANICAL AND ELECTRICAL ENGINEERS
Lexington - Louisville
www.stweng.com

NEW SPENCER COUNTY BUS GARAGE

TAYLORSVILLE, KENTUCKY

ELECTRICAL SITE UTILITIES PLAN

JOB NO.	1745
DATE	12/16/2019
DRAWN	MM
CHECKED	NM

COPYRIGHT © 2019
SHERMAN CARTER BARNHART ARCHITECTS, PLLC

REVISIONS

No.	Description	Date

SHEET

U2

PLUMBING LEGEND

PLUMBING SYMBOLS

SYMBOL	DESCRIPTION
	PIPE DOWN
	PIPE UP
	TEE DOWN
	TEE UP
	CONTINUATION
	CAP
	HAMMER ARRESTOR
	BALANCING VALVE
	BALL VALVE
	BUTTERFLY VALVE
	ELECTRIC CONTROL VALVE
	PRESSURE REDUCING VALVE
	CHECK VALVE
	GATE VALVE
	PLUG VALVE
	REDUCER
	UNION
	VALVE IN VERTICAL
	PRESSURE GAUGE
	STRAINER
	FLOW INDICATOR
	CLEANOUT
	FLOOR CLEANOUT
	THERMOMETER
	RECIRC. BALANCING STATION
FS	FLOW SWITCH
TS	TAMPER SWITCH ON VALVE
	PUMP, INLINE
	SUMP PUMP
G	GAS METER
W	WATER METER
TB	THRUST BLOCK
R	GAS REGULATOR
	FLOOR DRAIN
	P-TRAP
	FLOOR DRAIN GRATE
TS	FLOOR DRAIN GRATE
XX	SHEET NOTE
XX	DEMOLITION NOTE
	CONNECT NEW TO EXISTING
	EXTENT OF DEMOLITION
XX.XX	EQUIPMENT TAG
RISER X P.X.XX	RISER IDENTIFICATION TAG

ABBREVIATIONS

ADP	ACID DILUTION PIT
AFF	ABOVE FINISHED FLOOR
AFG	ABOVE FINISHED GRADE
AG	AIR GAP
AV	ACID VENT
AW	ACID WASTE
BFF	BELOW FINISHED FLOOR
BFG	BELOW FINISHED GRADE
BTU	BRITISH THERMAL UNIT
CA	COMPRESSED AIR
CFH	CUBIC FEET/HOUR
CI	CAST IRON
CRD	COMBINATION ROOF DRAIN
CO	CLEANOUT
CON	CONDENSATE
CW	COLD WATER
D	DISPOSAL
DD	DECK DRAIN
DI	DUCTILE IRON
DF	DRINKING FOUNTAIN
DSN	DOWNSPOUT NOZZLE
ECO	EXTERIOR CLEANOUT
EEW	EMERGENCY EYE WASH
ESEW	EMERGENCY SHOWER / EYE WASH
ET	EXPANSION TANK
ETP	ELECTRONIC TRAP PRIMER
EWC	ELECTRIC WATER COOLER
EWH	ELECTRIC WATER HEATER
FCO	FLOOR CLEANOUT
FD	FLOOR DRAIN
FS	FLOOR SINK
FS	FLOW SWITCH
G	NATURAL GAS
GPM	GALLONS PER MINUTE
GR	GREASE
GRV	GREASE VENT
GT	GREASE TRAP
GWH	GAS WATER HEATER
HA	HAMMER ARRESTOR
HB	HOSE BIBB
HW	HOT WATER
HWR	HOT WATER RETURN
I.E.	INVERT ELEVATION
IMB	ICE MAKER BOX
L/LAV	LAVATORY
LPG	LIQUID PETROLEUM GAS
LT	LAUNDRY TUB
MA	MEDICAL AIR
MB	MOP BASIN
MBH	1,000 BTU
MG	MEDICAL GAS
MH	MANHOLE
MIN	MINIMUM
MS	MOP SINK
N2	NITROGEN
O2	OXYGEN
OR	OPEN RECEPTACLE
ORD	OVERFLOW ROOF DRAIN
ORL	OVERFLOW ROOF LEADER
OWS	OIL WATER SEPARATOR
PD	PUMP DISCHARGE
PDI	PLUMBING DRAINAGE INSTITUTE

ABBREVIATIONS CONT.

PRV	PRESSURE REDUCING VALVE
PSI	POUNDS PER SQUARE INCH
PT	PLASTER TRAP
RBS	RECIRC. BALANCE STATION
RD	ROOF DRAIN
RL	ROOF LEADER
RP	RECIRCULATION PUMP
RPZ	REDUCED PRESSURE ZONE BACKFLOW PREVENTER
S	SINK
SAN	SANITARY
SCO	STACK CLEANOUT
SP	SUMP PUMP
SS	SERVICE SINK
ST	STORAGE TANK
STM	STORM
TB	THRUST BLOCK
TD	TRENCH DRAIN
TP	TRAP PRIMER
TMV	THERMOSTATIC MIXING VALVE
T&P	TEMPERATURE & PRESSURE
TS	TAMPER SWITCH
U	URINAL
UT	UTILITY TUB
V	VENT
VB	VACUUM BREAKER
VTR	VENT THROUGH ROOF
WB	WASHER BOX
WC	WATER CLOSET
W.C.	WATER COLUMN
WCO	WALL CLEANOUT
WH	WALL HYDRANT
WS	WASH STATION
WS	WATER SOFTENER
X	EXISTING

PLUMBING LINETYPES

SYMBOL	DESCRIPTION
1"CW	UNDER SLAB COLD WATER PIPING WITH SIZE
1"CW	COLD WATER PIPING WITH SIZE
1"HW	HOT WATER PIPING WITH SIZE
1"HWR	HOT WATER RETURN PIPING WITH SIZE
1"SAN	UNDER SLAB SANITARY PIPING WITH SIZE
1"SAN	SANITARY PIPING WITH SIZE
1"V	UNDER SLAB VENT PIPING WITH SIZE
1"V	VENT PIPING WITH SIZE
1"GR	UNDER SLAB GREASE PIPING WITH SIZE
1"GRV	UNDER SLAB GREASE VENT PIPING WITH SIZE
1"GRV	GREASE VENT PIPING WITH SIZE
1"AW	UNDER SLAB ACID WASTE PIPING WITH SIZE
1"AW	ACID WASTE PIPING WITH SIZE
1"AV	UNDER SLAB ACID VENT PIPING WITH SIZE
1"AV	ACID VENT PIPING WITH SIZE
1"RL	ROOF LEADER PIPING WITH SIZE
1"STM	UNDER SLAB STORM WITH SIZE
1"G	UNDER SLAB GAS PIPING WITH SIZE (SLEEVED)
1"G	GAS PIPING WITH SIZE
1"TW	TEMPERED WATER PIPING WITH SIZE

GENERAL NOTES - PLUMBING:

1. CONSTRUCTION PHASING: ALL WORK SHALL BE COORDINATED AND SCHEDULED WITH THE GENERAL CONTRACTOR, OTHER TRADES, THE OWNER, RELATED UTILITY COMPANIES SHALL COINCIDE WITH CONSTRUCTION PHASING PER THE ARCHITECTURAL DOCUMENTS. CONTACT THE ARCHITECT/ENGINEER IN THE EVENT OF A CONFLICT.
2. NEW UTILITIES: THE CONTRACTOR SHALL BE RESPONSIBLE FOR ALL NEW UTILITY SERVICES AND COSTS UNDER THIS CONTRACT. COORDINATE AND SCHEDULE ALL RELATED WORK WITH THE UTILITY COMPANIES.
3. MAINTAIN SITE UTILITIES: THE CONTRACTOR SHALL MAINTAIN ALL EXISTING SITE UTILITIES AT ALL TIMES. THE CONTRACTOR SHALL WORK CONTINUOUSLY TO RESTORE ANY OUTAGE. SCHEDULED SHUT-DOWNS SHALL REQUIRE 48 HOUR PRIOR NOTIFICATION WITH OWNER. COORDINATE ALL RELATED WORK WITH THE OWNER AND THE UTILITY COMPANIES AS REQUIRED.
4. VERIFY UTILITIES: FIELD VERIFY THE LOCATIONS AND ELEVATIONS OF EXISTING UTILITIES WHERE REQUIRED FOR CONNECTIONS OF NEW WORK PRIOR TO CONSTRUCTION AND FABRICATION. DOCUMENT ON THE AS-BUILT DRAWINGS; THE TYPE, SIZE, MATERIAL, LOCATION AND INVERT ELEVATIONS OF ALL UTILITIES ENCOUNTERED. COORDINATE ALL RELATED WORK WITH ALL PARTIES INVOLVED. CONTACT THE ENGINEER IN THE EVENT OF A CONFLICT.
5. CONTACT B.U.D.: THE EXISTING UTILITIES, EQUIPMENT, AND PIPING SHOWN ON THESE DRAWINGS ARE FROM RECORD DRAWINGS AND VISUAL INSPECTION OF THE SITE. THE NUMBER, LOCATION, SIZE, AND TYPE OF UTILITIES SHOWN ARE APPROXIMATE, AND THERE MAY BE OTHER UTILITIES NOT SHOWN. THE CONTRACTOR SHALL CONTACT ALL AFFECTED UTILITY COMPANIES AND KENTUCKY B.U.D. PRIOR TO BEGINNING EXCAVATION.
6. PERMITS, TESTING, AND INSPECTIONS: THE CONTRACTOR SHALL BE RESPONSIBLE FOR ALL PERMITS, TESTING AND SCHEDULES INSPECTIONS.
7. REMOVAL OF EXISTING UTILITIES: REMOVE UNUSED/ABANDONED EQUIPMENT, PIPING, ETC. AS NECESSARY TO INSTALL THE NEW WORK. CAP THE ENDS OF ALL LINES AND ABANDONED IN PLACE.
8. TEMPORARY CONSTRUCTION HEAT: PROVIDE TEMPORARY HEAT IN CONSTRUCTION AREAS AS REQUIRED TO PREVENT FREEZING OF WATER PIPING DURING CONSTRUCTION.
9. PATCHING AND REPAIRING: PATCH AND REPAIR ALL AREAS WHERE WALLS, SLABS, PAVEMENT, CURBS, VEGETATION AND MATERIALS HAVE BEEN CUT, REMOVED, DISTURBED AND OR MODIFIED. MATCH EXISTING MATERIALS, RATINGS, AND FINISHES.
10. CUTTING EXISTING MATERIALS: CUTTING OF EXISTING PAVEMENT, SLABS, CONCRETE MASONRY, WALLS, ETC. SHALL BE SAW-CUT OR CORE DRILLED. NO "HAMMER DRILLING" WILL BE ALLOWED.
11. ROOFING PENETRATIONS: ALL ROOF PENETRATIONS SHALL BE IN COMPLIANCE WITH THE ROOFING MANUFACTURER'S GUIDELINES, THE AMERICAN ROOFING COUNCIL, AND MAINTAIN ALL WARRANTIES.
12. WALL PENETRATIONS: SEAL ALL PIPING PENETRATIONS THROUGH EXTERIOR WALLS WITH SILICONE SEALANT AS REQUIRED TO MAKE WATER/WEATHER TIGHT.
13. EXISTING WALL OPENINGS: EXISTING OPENINGS IN WALLS THAT ARE NOT BEING RE-USED SHALL BE PATCHED/CLOSED BY THE GENERAL CONTRACTOR.
14. NEW OPENINGS: NEW OPENINGS FOR PLUMBING PENETRATIONS THROUGH FIRE/SMOKE RATED WALLS, ASSEMBLIES AND SLABS SHALL BE BY THE GENERAL CONTRACTOR. THE PLUMBING CONTRACTOR SHALL COORDINATE THE SIZE AND LOCATION OF ALL OPENINGS WITH THE GENERAL CONTRACTOR AND OTHER TRADES.
15. FIRE AND SMOKE STOPPING: ALL PLUMBING PENETRATIONS THROUGH FIRE/SMOKE RATED WALLS, ASSEMBLIES AND SLABS SHALL BE THE RESPONSIBILITY OF THE GENERAL CONTRACTOR. THE PLUMBING CONTRACTOR SHALL COORDINATE THE SIZE AND LOCATION OF ALL OPENINGS WITH THE GENERAL CONTRACTOR AND OTHER TRADES.
16. INSULATION: INSULATE ALL DOMESTIC HOT/COLD WATER, RECIRCULATION PIPING, AND ROOF LEADERS.
17. HAMMER ARRESTOR: ALL HAMMER ARRESTORS SHOWN ON FLOOR PLANS, BUT NOT ON RISERS OR VICE VERSA SHALL BE PROVIDED AND INSTALLED AS SHOWN ON BOTH.
18. VALVES: ALL VALVES SHOWN ON FLOOR PLANS, BUT NOT ON RISERS OR VICE VERSA, SHALL BE PROVIDED AND INSTALLED AS IF SHOWN ON BOTH.
19. ELECTRICAL PANELS AND EQUIPMENT: PLUMBING PIPING, SYSTEMS, AND EQUIPMENT SHALL BE INSTALLED TO MAINTAIN THE DEDICATED WORKING/ELECTRICAL SPACE ABOVE, BELOW, AND IN FRONT OF ELECTRICAL PANELS AND EQUIPMENT PER THE REQUIREMENTS OF THE N.E.C. (NATIONAL ELECTRIC CODE).

SHERMAN CARTER BARNHART ARCHITECTS

STATE OF KENTUCKY NICHOLAS MORGAN MCCLURE LICENSED PROFESSIONAL ENGINEER 12/12/2019

SHROUT TATE WILSON MECHANICAL AND ELECTRICAL ENGINEERS
Lexington - Louisville
www.ctweng.com

NEW SPENCER COUNTY BUS GARAGE

TAYLORSVILLE, KENTUCKY

PLUMBING LEGEND

JOB NO.	1745
DATE	12/16/2019
DRAWN	MM
CHECKED	NM

COPYRIGHT © 2019
SHERMAN CARTER BARNHART ARCHITECTS, PLLC

REVISIONS

No.	Description	Date

SHEET

P0

GENERAL NOTES:

1. INSTALL ALL VALVES IN ACCESSIBLE LOCATIONS.

⬡ SHEET KEYNOTES:

1. AUDIO AND VISUAL ALARM PANEL FOR BUS WASH STORAGE TANK. INSTALL WITH TOP AT 42"A.F.F..
2. COORDINATE LOCATION OF FLOOR DRAIN WITH RELOCATED AIR COMPRESSOR.
3. COORDINATE LOCATION OF FLOOR DRAIN WITH HVAC UNIT AND WATER HEATER.
4. PROVIDE AIR CONNECTION WITH VALVE FOR HOSE REEL PROVIDED BY OWNER. CONSTRACTOR TO MAKE ALL FINAL CONNECTIONS.
5. INSTALL AIR DROP WITH SHUT OFF VALVE AND CAP AT 42"A.F.F. COORDINATE ALL LOCATION WIITH OWNER PRIOR TO INSTALLATION.
6. CONTRACTOR TO RELOCATE EXISTING AIR COMPRESSOR FROM EXISTING GARAGE. REINSTALL IN NEW LOCATION AND PROVIDE ALL COMPONENTS AS NECESSARY TO CONNECT TO NEW PIPING. DOCUMENT CONDITION PRIOR TO MOVING.
7. PROVIDE AIR DROP WITH VALVE AND CONNECT TO RELOCATED BUS OIL TANK. PROVIDE ALL COMPONENTS AS NECESSARY TO RECONNECT.
8. PROVIDE AIR DROP WITH VALVE AND CONNECT TO RELOCATED WASTE OIL HEATER TANK. PROVIDE ALL COMPONENTS AS NECESSARY TO RECONNECT.
9. BACKFLOW PREVENTER. REFER TO DETAIL ON DRAWING P3. ROUTE DRAIN PIPING TO FLOOR DRAIN.
10. COORDINATE PIPING LOCATION WITH STORAGE RACKS.
11. REFER TO WATER HEATER PIPING DIAGRAM ON DRAWINGS P3.
12. INSTALL WH HYDRANTS AT 42" ABOVE FINISH FLOOR. CONNECT EXTERIOR HYDRANT TO HOSE REEL PROVIDED BY OWNER.

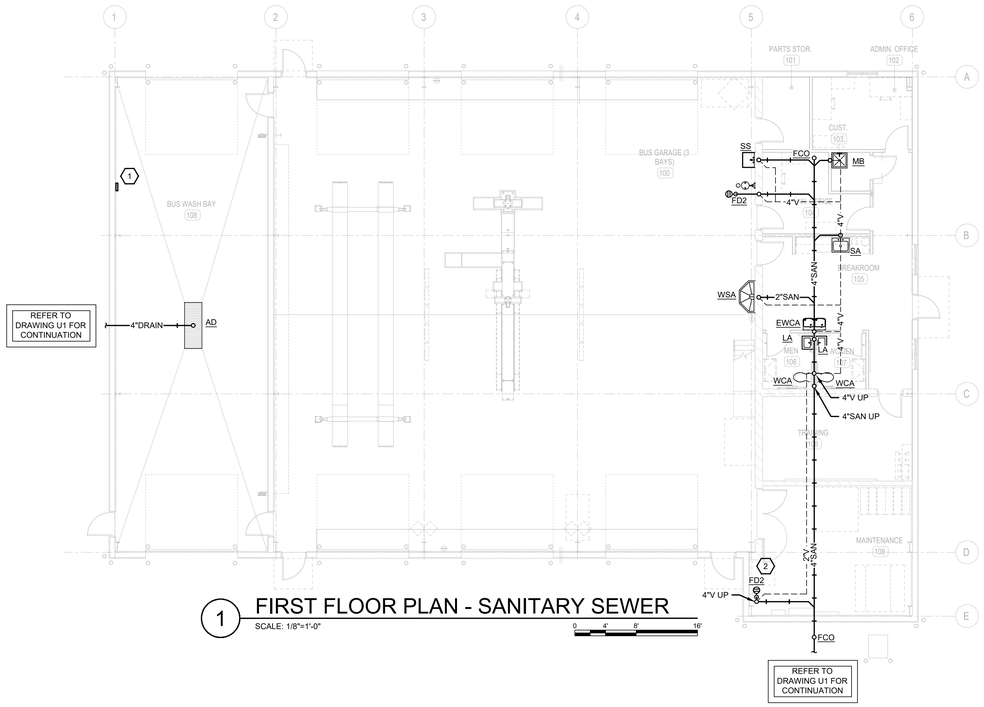

1 FIRST FLOOR PLAN - SANITARY SEWER
SCALE: 1/8"=1'-0"

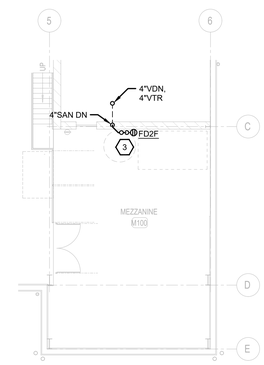

2 MEZZANINE PLAN - SANITARY SEWER
SCALE: 1/8"=1'-0"

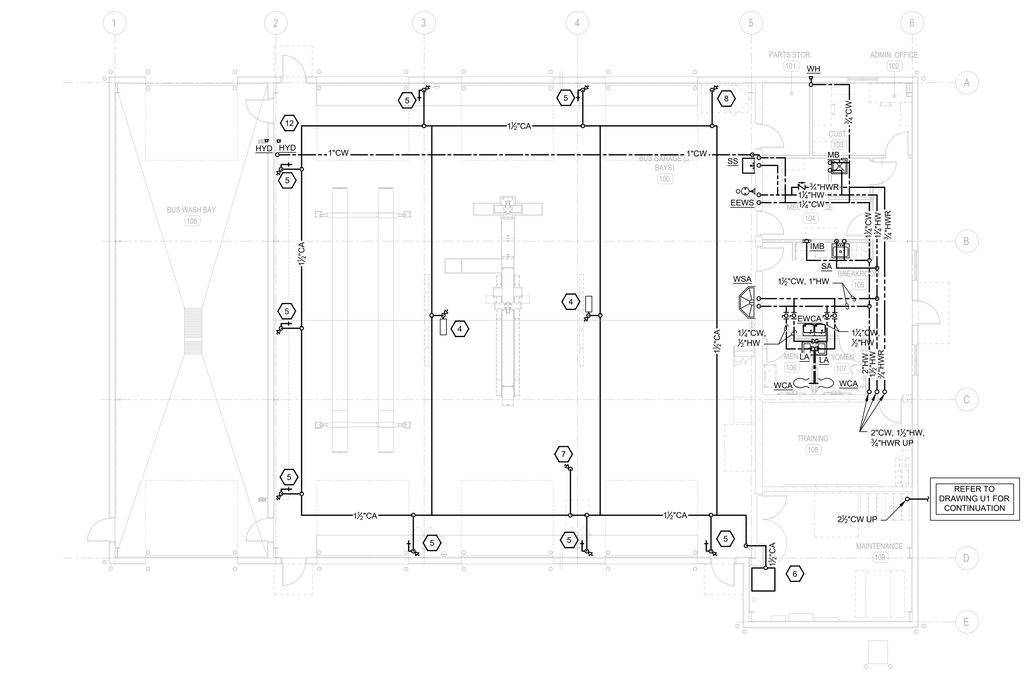

3 FIRST FLOOR PLAN - DOMESTIC WATER
SCALE: 1/8"=1'-0"

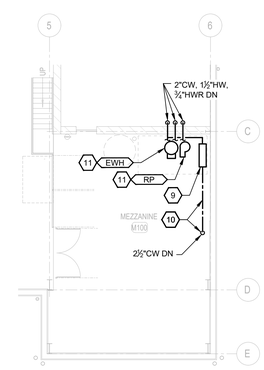

4 MEZZANINE PLAN - DOMESTIC WATER
SCALE: 1/8"=1'-0"

SHERMAN CARTER BARNHART ARCHITECTS

STATE OF KENTUCKY PROFESSIONAL ENGINEER NATHAN MORGAN 32125915

SHROUT TATE WILSON MECHANICAL AND ELECTRICAL ENGINEERS
Lexington - Louisville
www.stweng.com

NEW SPENCER COUNTY BUS GARAGE

TAYLORSVILLE, KENTUCKY

FLOOR PLANS - PLUMBING

JOB NO.	1745
DATE	12/16/2019
DRAWN	MM
CHECKED	NM

COPYRIGHT © 2019
SHERMAN CARTER BARNHART ARCHITECTS, PLLC

REVISIONS

No.	Description	Date

SHEET

P1

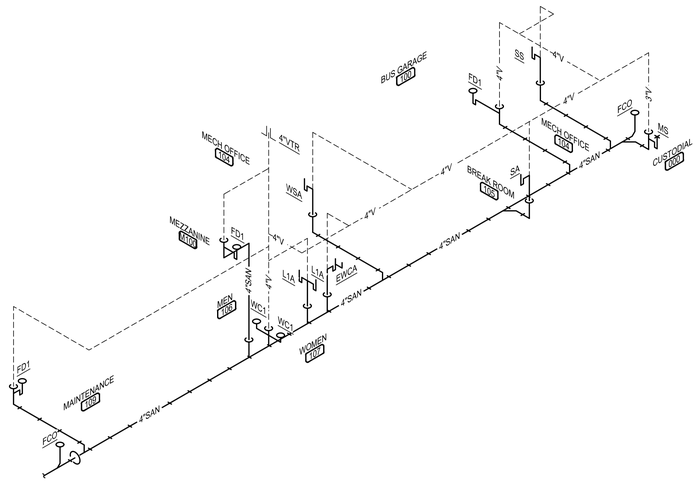

1 SANITARY RISER

NOT TO SCALE

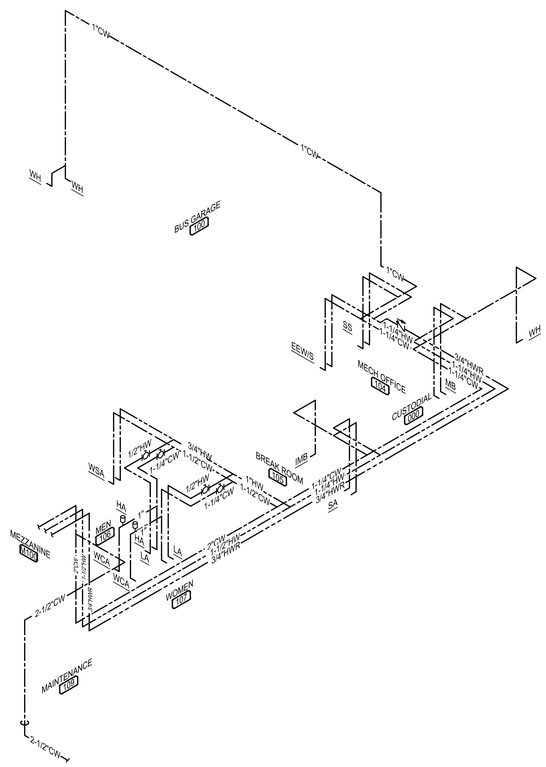

2 DOMESTIC WATER RISER

NOT TO SCALE

SHERMAN CARTER BARNHART ARCHITECTS

SHROUT TATE WILSON MECHANICAL AND ELECTRICAL ENGINEERS
Lexington - Louisville
www.ctweng.com

NEW SPENCER COUNTY BUS GARAGE

TAYLORSVILLE, KENTUCKY

PLUMBING RISERS

JOB NO.	1745
DATE	12/16/2019
DRAWN	MM
CHECKED	NM

COPYRIGHT © 2019
SHERMAN CARTER BARNHART ARCHITECTS, PLLC

REVISIONS

No.	Description	Date

SHEET

P2

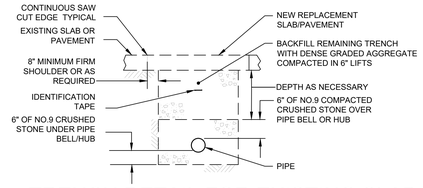

TRENCH DETAIL FOR EXISTING SLAB/PAVMENT

NOT TO SCALE

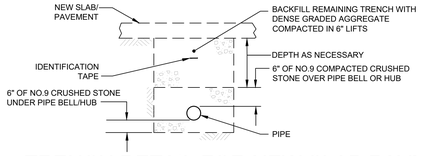

TRENCH DETAIL FOR NEW SLAB/PAVMENT

NOT TO SCALE

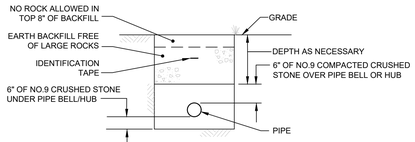

TRENCH DETAIL FOR EARTH COVER

NOT TO SCALE

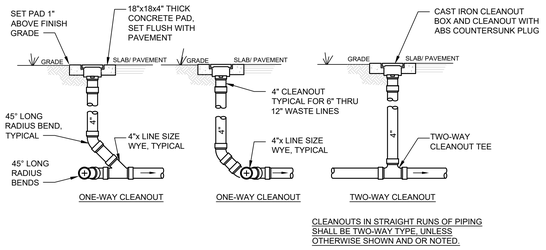

SANITARY SEWER CLEANOUT DEATILS

NOT TO SCALE

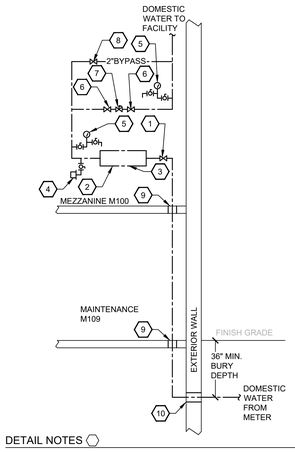

DETAIL NOTES

1. MAIN DOMESTIC WATER SERVICE VALVE. EPOXY COATED NON-RISING STEM RESILIENT WEDGE GATE VALVE, SIZE OF WATER SERVICE.
2. DOUBLE CHECK VALVE BACK FLOW PREVENTER, WITH OPTIONAL WYE STRAINER, AND OPTIONAL OS&Y GATE VALVES. INSTALL PER MANUFACTURER'S INSTRUCTIONS AND RECOMMENDATIONS.
3. LOCATE ABOVE FLOOR DRAIN.
4. ¾" HB HOSE BIBB AND SHUT-OFF VALVE FOR SYSTEM DRAIN DOWN.
5. PRESSURE GAUGE WITH GAUGE PROTECTER, SHUTOFF, AND BLEED VALVE.
6. SERVICE SIZE OS&Y GATE VALE FOR PRV ISOLATION.
7. PRV PRESSURE REDUCING VALVE WITH LOW FLOW BY-PASS AND EPOXY COATING. INSTALL PER MANUFACTURER'S INSTRUCTIONS AND RECOMMENDATIONS.
8. NORMALLY CLOSED 2" OS&Y GATE VALVE FOR EMERGENCY BYPASS.
9. SLEEVE WATER SERVICE THROUGH FLOOR SLAB.
10. SLEEVE WATER SERVICE IN FOUNDATION WALL IF NECESSARY. COORDINATE LOCATION AND DEPTH WITH STRUCTURAL CONTRACTOR.

DOMESTIC WATER SERVICE ENTRANCE DETAIL (OVER 2" DBL. CK.)(PRV)

NOT TO SCALE

GENERAL WATER HEATER NOTES

- PROVIDE UNI-STRUT TYPE VERTICAL SUPPORTS FOR RECIRCULATION PUMP.
- INSTALL DIELECTRIC PIPE NIPPLES WITH UNIONS AT ALL WATER CONNECTIONS TO HEATERS.
- LABEL ALL PIPING AND EQUIPMENT PER SPECIFICATIONS.

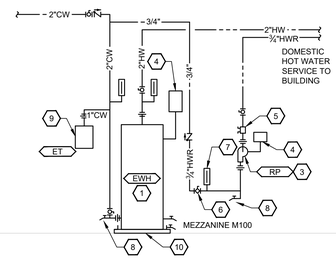

DETAIL NOTES

1. ELECTRIC WATER HEATER. INSTALL PER MANUFACTURER'S INSTRUCTIONS AND RECOMMENDATIONS. SET TEMPERATURE TO 110°F. REFER TO FLOOR PLAN FOR LOCATION. INSTALL WITH 3" DRAIN PAN.
2.
3. RECIRCULATION PUMP. INSTALL WITH OPTIONAL AQUASTAT AND TIMER. PROGRAM PUMP PER OWNER'S SCHEDULE. CONNECT TO BUILDING AUTOMATION SYSTEM.
4. POWER AND DISCONNECT BY ELECTRICAL CONTRACTOR.
5. GLASS SIGHT FLOW INDICATOR.
6. BALANCING VALVE.
7. THERMOMETER. TYPICAL
8. ¾" HB HOSE SYSTEM DRAIN.
9. EXPANSION TANK. INSTALL PER MANUFACTURER'S INSTRUCTIONS AND RECOMMENDATIONS.
10. 4" FORMED CONCRETE EQUIPMENT PLATFORMS.
11.

ELECTRIC WATER HEATER PIPING DETAIL

NOT TO SCALE

SHERMAN CARTER BARNHART ARCHITECTS

SHROUT TATE WILSON MECHANICAL AND ELECTRICAL ENGINEERS
Lexington - Louisville
www.stweng.com

NEW SPENCER COUNTY BUS GARAGE

TAYLORSVILLE, KENTUCKY

PLUMBING DETAILS

JOB NO.	1745
DATE	12/16/2019
DRAWN	MM
CHECKED	NM

COPYRIGHT © 2019
SHERMAN CARTER BARNHART ARCHITECTS, PLLC

REVISIONS

No.	Description	Date

SHEET

P3

PLUMBING FIXTURE SCHEDULE

MARK	MANUFACTURER	MODEL / TYPE	TRIM	CW	HW	TRAP	WASTE	VENT	MOUNTING	REMARKS	OTHER ACCEPTABLE MANUFACTURERS
WCA	AMERICAN STANDARD	2257.101 WATER CLOSET	FLUSH VALVE: AMERICAN STANDARD 6047.161.002 SEAT: AMERICAN STANDARD 5901.100	1"	---	INTEGRAL	4"	2"	WALL HUNG: WC1A - RIM 17"	ADA COMPLIANT, ELONGATED BOWL, TOP SPUD, 1.6G MANUAL FLUSH VALVE, HEAVY DUTY OPEN FRONT SEAT LESS COVER, WITH CARRIER	ZURN, SLOAN, KOHLER, CRANE
LA	AMERICAN STANDARD	0355.012 ADA LAVATORY	FAUCET: AMERICAN STANDARD 7385.003 TRIM: CHROME PLATED GRID DRAIN, LOOSE KEY OPERATED SUPPLY STOPS, ADA COMPLIANT INSULATION WRAP.	1/2"	1/2"	1-1/4"	2"	2"	WALL HUNG: RIM 34"	20-1/2 " X 18-1/4", VITREOUS CHINA, 4" CENTERS, BACK AND SIDE SPLASH, HEAVY DUTY CONCEALED ARM CARRIERS, SINGLE HANDLE FAUCET	ZURN, SLOAN, KOHLER, CRANE, MOEN, DELTA, T&S
SA	ELKAY	LR1918 SINGLE COMPARTMENT SINK	FAUCET: AMERICAN STANDARD 4205.001 TRIM: CHROME PLATED GRID STRAINER, LOOSE KEY OPERATED SUPPLY STOPS.	1/2"	1/2"	1-1/4"	2"	2"	COUNTER SET	16" X 11-1/2" X 7-5/8" INSIDE BOWL, #18 GAUGE 304 STAINLESS STEEL, OFF-CENTER REAR DRAIN, 4 HOLE PUNCH, SINGLE HANDLE FAUCET W/ HAND SPRAY.	JUST, AMERICAN STANDARD, KOHLER, MOEN, DELTA,T&S
MB	FIAT	TSB100 TERRAZZO MOP SINK	FAUCET: 830AA WITH VACUUM BREAKER TRIM: 832AA HOSE AND HANGER, MSG WALL GUARDS	3/4"	3/4"	3"	3"	2"	FLOOR SET	24" X 24" X 12", STAINLESS STEEL CAPS ON ALL SIDES, ACCESSIBLE CHECK VALVES ON SUPPPLIES	STERN WILLIAMS, MUSTEE
SS	AMERICAN STANDARD	7692.008 CAST IRON SERVICE SINK	FAUCET:7692.008B WITH VACUUM BREAKER TRIM: 7798.030 CAST IRON P-TRAP WITH CLEAN OUTS	3/4"	3/4"	3"	3"	2"	FLOOR SET	18-1/2" X 14-1/8" X 10-1/2" BOWL, ACCESSIBLE CHECK VALVES ON SUPPPLIES	KOHLER, TABCO
WSA	BRADLEY	MG-3 / IR 3 STATION TERREON SOLID SURFACE WASH STATION	TRIM: S-CHROME P-TRAP, TMA NAVIGATOR THERMOSTATIC MIXING ASSEMBLY, LOOSE KEY OPERATED SUPPLY STOPS.	1/2"	1/2"	1-1/4"	2"	2"	RIM 34"	DESIGNER COLOR BY ARCHITECT, INFRARED SENSOR, WITH SOLENOID VALVE AND LOW VOLTAGE TRANSFORMER	ACORN, WILLOUGHBY, SLOAN
EWCA	ACORN	172108F-UBL-BF1 ADA HI-LO WATER COOLER & BOTTLE FILLER	TRIM: CSC3 CONCEALED ARM SUPPORT, SK5 SKIRT KIT, CHROME P-TRAP	1/2"	---	1-1/4"	2"	2"	WALL HUNG: SPOUT 34" / 40"	PUSH BUTTON BOTTLE FILLER, 8 GPH OF CHILLED WATER, GRANITE FINISH, FLEXIBLE BUBBLER.	ELKAY, OASIS, HALSEY TAYLOR, MURDOCK
EEW/S	ACORN	S1320 PEDESTAL MOUNTED EYE / FACE WASH AND SHOWER	TRIM: TMV33 THERMOSTATIC MIXING VALVE	3/4" TO TMV33	3/4" TO TMV33	1-1/4"	1-1/4"	2"	PEDESTAL FLOOR SET	1-1/4" TEMPERED WATER FROM VALVE TO SHOWER. 1/2" TEMPERED WATER TO EYE / FACE WASH.	BRADLEY, SPEAKMAN
HB	MURDOCK	8121-LF BENT NOSE HOSE BIBB	WITH VACUUM BREAKER & REMOVABLE LOOSE KEY HANDLE	3/4"	---	---	---	---	18" AFF	WITH FLANGE	WOODFORD, ZURN , MIFAB
WH	MURDOCK	M-3509QT NON FREEZE BOX WALL HYDRANT	VARIATIONS: -CL CYLINDER LOCK, -W WATER COVER	3/4"	---	---	---	---	18" AFG	WITH INTEGRAL VACUUM BREAKER, QUARTER TURN FULL FLOW VALVE, COORDINATE DEPTH WITH INTERIOR WALL.	WOODFORD, ZURN , MIFAB
YH	MURDOCK	M-39090 NON FREEZE YARD HYDRANT	VARIATIONS: -H VACUUM BREAKER	3/4"	---	---	---	---	36" AFF	ADJUSTABLE FLOW WHEEL LOCK HANDLE	WOODFORD, ZURN , MIFAB
IMB	SIOUX CHIEF	696RG1010XF ICE MAKER OUTLET BOX	TRIM: NO LEAD VALVES, WITH ARRESTORS	1/2"	---	---	---	---	48" AFF	FIRE RATED, WITH FRAME, SUPPLY CONNECTION TYPE BY CONTRACTOR	ZURN, GUY GRAY, OATEY, JAY R SMITH
HA	ZURN	1250 XL HAMMER ARRESTORS	---	1/2", 3/4", 1"	---	---	---	---	ON SUPPLY LINES TO FIXTURES	SIZE AND INSTALL PER MANUFACTURERS INSTRUCTIONS	SIOUX CHIEF, PPP, MIFAB, JAY R SMITH, JOSAM
FD1	JOSAM	32104 FLOOR DRAIN	9" DUCTILE IRON STRAINER, 1/2" PRIMER CONNECTION, SEDIMENT BUCKET	1/2"	---	---	4"	---	FLUSH IN FLOOR	TRAP PIMER PIPING MAY BE PEX TYPE.	WATTS, JAY R SMITH, MIFAB, WADE, ZURN
FD1F	JOSAM	32104 FLOOR DRAIN	9" DUCTILE IRON STRAINER, 1/2" PRIMER CONNECTION, SEDIMENT BUCKET, 4" FUNNEL ASSEMBLY	1/2"	---	---	4"	---	FLUSH IN FLOOR	INSTALL FUNNEL ON FLOOR DRAIN GRATE. COORDINATE ALL CONDENSATE AND T&P RELIEF DISCHARGE PIPING WITH FUNNEL	WATTS, JAY R SMITH, MIFAB, WADE, ZURN
4"O.R.	JOSAM	88210 DEEP SEAL TRAP	1/2" THREADED CONNECTION, INTERNAL BUCKET, CLEANOUT WITH BRONZE PLUG	1/2"	---	---	3"	1-1/2"	VARIES	INSTALL IN ACCESSIBLE LOCATION WITH AP ACCESS PANELS. ROUTE CONDENSATE AND DISCHARGE PIPING TO SPILL INTO OPENING.	---
AP	JR SMITH	4760 ACCESS PANEL	12"X12" VANDAL RESISTANT ACCESS PANEL.	---	---	---	---	---	VARIES	ARCHITECT TO APPROVE ALL LOCATIONS AND ELEVATIONS	WATTS, JAY R SMITH, MIFAB, WADE, ZURN
FCO, ECO	JOSAM	55000 CLEANOUT	SATIN BRONZE	---	---	---	4"	---	FLUSH IN FLOOR		WATTS, JAY R SMITH, MIFAB, WADE, ZURN
TD1	JOSAM	PRO-PLUS 200C, 8" INTERNAL WIDTH POLYMER TRENCH DRAIN, WITH DUCTILE IRON CLASS "C" GRATE	BOTTOM OUTLET, END CAPS, SLOPED CHANNEL, SUPPORT BRACKETS CAPABLE OF ACCEPTING REBAR.	---	---	---	4"	---	FLUSH IN FLOOR	TRAP PIMER PIPING MAY BE PEX TYPE.	WATTS, JAY R SMITH, MIFAB, WADE, ZURN
HR	REEL CRAFT	A5850 ELP ENCLOSED COMPRESSED AIR HOSE REEL	FIFTY FOOT (50') 1/2" HOSE, MAXIMUM PRESSURE 300 PSI	---	---	---	---	---	COORDINATE MOUNTING HEIGHT WITH ARCHITECT	1/2" INLET CONNECTION	SPEEDAIRE, INGERSOL-RAND

ELECTRIC WATER HEATER SCHEDULE

MARK	MANUFACTURER	MODEL	LOCATION	TANK CAPACITY (GAL)	RECOVERY AT 100°F RISE	EXPANSION TANK #	ELECTRICAL KW	ELECTRICAL V / Ø	ELECTRICAL MCA	ELECTRICAL MOCP	REMARKS
EWH-01	A.O.SMITH	DVE-120-54	MAINT. 107	119	111 GPH	ET-01	27	208/3	---	---	1,2

REMARKS:
1. INSTALL ON 4" POURED CONCRETE PAD.
2. INSTALL METAL DRIP PAN UNDER WATER HEATES.

OTHER ACCEPTABLE MANUFACTURERS INCLUDE: STATE, AMERICAN

PUMP SCHEDULE

MARK	MANUFACTURER	MODEL	LOCATION	FLOW (GPM)	HEAD (FT)	CONNECTIONS INLET	CONNECTIONS OUTLET	ELECTRICAL HP	ELECTRICAL V / Ø / Hz	ELECTRICAL MCA	ELECTRICAL MOCP	REMARKS
RP-01	TACO	SPE-1	MAINT. 107	11	13	3/4"	3/4"	0.5	120/1/60	12.2	20	X

REMARKS:
1
2
3
OTHER ACCEPTABLE MANUFACTURERS INCLUDE: BELL & GOSSETT, WILO. REFER TO SPECIFICIATIONS FOR ADDITIONAL REQUIREMENTS.

EXPANSION TANK SCHEDULE

MARK	MANUFACTURER	MODEL	LOCATION	TANK VOLUME (GAL)	ACCEPTANCE VOLUME (GAL)	REMARKS
ET-1	ZURN	WTTA-5	MAINT. 107	3.5	2.3	1,2

REMARKS:
1. ASME RATED
2. 100 PSIG PRESSURE RATING
3
OTHER ACCEPTABLE MANUFACTURERS INCLUDE: WESSELS, WATTS.
REFER TO SPECIFICIATIONS FOR ADDITIONAL REQUIREMENTS.

SHERMAN CARTER BARNHART ARCHITECTS

SHROUT TATE WILSON MECHANICAL AND ELECTRICAL ENGINEERS
Lexington - Louisville
www.stweng.com

NEW SPENCER COUNTY BUS GARAGE
TAYLORSVILLE, KENTUCKY

PLUMBING SCHEDULES

JOB NO.	1745
DATE	12/16/2019
DRAWN	MM
CHECKED	NM

COPYRIGHT © 2019
SHERMAN CARTER BARNHART ARCHITECTS, PLLC

REVISIONS

No.	Description	Date

SHEET
P4

GENERAL NOTES:

1. REFER TO SPECIFICATIONS AND THE CONTRACT DOCUMENTS FOR ADDITIONAL INFORMATION AND REQUIREMENTS.
2. ALL MECHANICAL WORK SHALL BE PERFORMED BY A LICENSED MECHANICAL CONTRACTOR.
3. ALL WORK SHALL BE COORDINATED AND SCHEDULED WITH THE CONSTRUCTION MANAGER (CM) OR GENERAL CONTRACTOR (GC), OTHER TRADES, THE OWNER, AND RELATED UTILITY COMPANIES. ALL WORK SHALL COINCIDE WITH THE CONSTRUCTION PHASING PER THE CONTRACT DOCUMENTS OR CONSTRUCTION DOCUMENTS AND/OR AS MODIFIED BY THE CM/GC AND APPROVED BY THE OWNER AND DESIGN TEAM. THE MECHANICAL CONTRACTOR SHALL COORDINATE AND DEVELOP A PHASING PLAN WHERE ONE IS NOT EXPLICITLY SHOWN AND SHALL ENSURE THAT SAID PHASING PLAN IS APPROVED PRIOR TO PROCEEDING WITH WORK. ANY AND ALL DEMOLITION SHALL NOT PERMIT INTERRUPTION OF SERVICE IN AN OCCUPIED BUILDING UNLESS COORDINATED AND APPROVED.
4. ALL DRAWINGS ARE DIAGRAMMATIC AND INDICATE THE GENERAL ARRANGEMENTS OR GEOMETRICAL RELATIONSHIPS OF DUCTWORK, PIPING, EQUIPMENT, AND SERVICES. THEY ARE NOT INTENDED TO SPECIFY OR SHOW EVERY OFFSET, SEQUENCE, DEVICE, OPTION, FITTING, VALVE, OR COMPONENT. CONTRACTOR TO PROVIDE ANY ADDITIONAL DUCT OR PIPING OFFSETS AND/OR FITTINGS, INCLUDING DIVIDED DUCTS AND FLATTENED DUCTS, REQUIRED FOR PROPER INSTALLATION AND TO MAINTAIN CLEARANCES AS ENCOUNTERED IN THE FIELD.
5. THE MECHANICAL CONTRACTOR SHALL OBTAIN A COPY OF THE ENTIRE SET OF CONTRACT DOCUMENTS PRIOR TO BID AND SHALL COORDINATE ROUTING AND INSTALLATION OF MECHANICAL DUCTWORK, PIPING, AND EQUIPMENT WITH ALL OTHER DISCIPLINES AND TRADES INCLUDING BUT NOT LIMITED TO CIVIL, ARCHITECTURAL, STRUCTURAL, FIRE SUPPRESSION, PLUMBING, AND ELECTRICAL.
6. REFER TO THE ENTIRE SET OF CONTRACT DOCUMENTS FOR DETAILS OF CONSTRUCTION AND INSTALLATION REQUIREMENTS. FURNISH ALL LABOR, MATERIAL, AND EQUIPMENT REQUIRED FOR COMPLETION AND OPERATION OF A FULLY FUNCTIONAL MECHANICAL SYSTEM AND IN ACCORDANCE WITH ALL APPLICABLE CODES AND STANDARDS INCLUDING BUT NOT LIMITED TO THE KENTUCKY BUILDING CODE, ASHRAE, IMC, IECC, SMACNA, AND NFPA.
7. THE EXACT LOCATIONS OF ALL EQUIPMENT, DUCTS, DIFFUSERS, ETC. SHALL BE COORDINATED WITH ALL OTHER TRADES. CEILING MOUNTED LIGHTING AND ELECTRICAL REQUIREMENTS TAKE PRECEDENCE OVER CEILING MOUNTED MECHANICAL EQUIPMENT. SEE ARCHITECTURAL REFLECTED CEILING PLANS FOR CEILING GRID AND LIGHTING LAYOUT FOR COORDINATION OF FINAL DIFFUSER LOCATIONS.
8. THE MECHANICAL DRAWINGS REFLECT A “BASIS OF DESIGN” HVAC SYSTEM THAT HAS BEEN DESIGNED AROUND SPECIFIC PRODUCTS/MANUFACTURER'S (SEE SCHEDULES). THE SELECTION OF A “BASIS OF DESIGN” HAS INFLUENCED THE DESIGNS OF OTHER TRADES (ELECTRICAL, STRUCTURAL, ETC.). THE CONTRACTOR MAY USE “NON-BASIS OF DESIGN” PRODUCTS/MANUFACTURER'S AS PERMITTED BY THE SPECIFICATIONS AND/OR CONTRACT DOCUMENTS. COORDINATION OF ALL MODIFICATIONS TO EACH DISCIPLINE WHICH RESULT FROM THE USE OF “NON-BASIS OF DESIGN” EQUIPMENT OR MATERIALS SHALL BE THE RESPONSIBILITY OF THE MECHANICAL CONTRACTOR. IF “NON-BASIS OF DESIGN” MANUFACTURERS, SIZES, OR MODEL NUMBERS ARE BID, SUBMITTED, OR INSTALLED; IT IS THE RESPONSIBILITY OF THE MECHANICAL CONTRACTOR AND ALL OF HIS OR HER SUBCONTRACTORS TO COORDINATE ALL DIFFERENCES PRIOR TO BID. ALL COSTS OF ALL TRADES ASSOCIATED WITH THE USE OF “NON-BASIS OF DESIGN” EQUIPMENT SHALL BE THE RESPONSIBILITY OF THE MECHANICAL CONTRACTOR AND SHALL BE INCLUDED IN THE BID. SUBSEQUENTLY, ANY ADDITIONAL COST BORE BY THE ENGINEER (MECHANICAL, ELECTRICAL, ETC) TO ACCOMMODATE "NON-BASIS OF DESIGN" EQUIPMENT SHALL BE BORE BY THE CONTRACTOR AND PAID TO THE ENGINEER OF RECORD DURING SUBMITTALS.
9. EQUIPMENT OR MATERIALS AS ALLOWED BY THE SPECIFICATIONS AND/OR CONTRACT DOCUMENTS, WHICH ARE INSTALLED AND SUBSEQUENTLY VIEWED UNSATISFACTORY BY THE OWNER AND/OR ENGINEER WITHIN THE WARRANTY PERIOD, SHALL BE REMOVED COMPLETELY BY THE CONTRACTOR AND REPLACED WITH THE ORIGINAL DESIGN OR CORRECTED AS DIRECTED BY THE ENGINEER WITHOUT ADDITIONAL COST TO THE OWNER.
10. CONTRACTOR SHALL VISIT THE JOB SITE, FIELD VERIFY FIT, COORDINATE WITH OTHER TRADES, AND BECOME FAMILIAR WITH ALL PROJECT CONDITIONS PRIOR TO FABRICATING DUCTWORK, INSTALLING EQUIPMENT, ETC. NO ALLOWANCES WILL BE MADE FOR LACK THEREOF.
11. THE CONTRACTOR SHALL BE RESPONSIBLE FOR COORDINATION AND COSTS FOR ALL PERMITS, TESTING, AND INSPECTIONS.
12. CONTRACTOR TO REMOVE UNUSED/ABANDONED HVAC SYSTEMS AND EQUIPMENT UNLESS INDICATED OTHERWISE ON THE CONTRACT DOCUMENTS.
13. COORDINATE WITH THE CONTRACT DOCUMENTS AND PROVIDE TEMPORARY HEAT AS REQUIRED.
14. INFORMATION AND COMPONENTS SHOWN ON RISER DIAGRAMS OR DETAILS BUT NOT SHOWN ON PLANS AND VICE VERSA, SHALL BE PROVIDED AS IF REQUIRED BY BOTH.
15. THE ENTIRE MECHANICAL INSTALLATION SHALL BE AS REQUIRED TO MAINTAIN FIRE/SMOKE RATINGS AND/OR “UL” ASSEMBLY RATINGS AS REQUIRED BY THE CONTRACT DOCUMENTS AND AS SHOWN ON THE ARCHITECTURAL AND MECHANICAL DRAWINGS. SEAL AROUND ALL PENETRATIONS THROUGH ALL FIRE/SMOKE SEPARATIONS AND/OR “UL” RATED ASSEMBLIES. COORDINATE ALL PENETRATIONS WITH THE CONSTRUCTION MANAGER AND/OR GENERAL CONTRACTOR. PROVIDE ADDITIONAL FIRE DAMPERS, SMOKE DETECTORS, AND SMOKE DAMPERS (INCLUSIVE OF WIRING) AS REQUIRED FOR A FULLY FUNCTIONAL AND CODE COMPLIANT SYSTEM.
16. ALL DUCTWORK, PIPING, AND MECHANICAL EQUIPMENT SHALL BE SUPPORTED DIRECTLY FROM THE STRUCTURE. NO OTHER TRADES, I.E. ELECTRICAL, CEILING, PLUMBING, ETC., SHALL BE SUSPENDED, HUNG, OR SUPPORTED FROM MECHANICAL DUCTWORK OR MECHANICAL PIPING.
17. ALL BUILDING PENETRATIONS MUST BE COORDINATED WITH THE ARCHITECT AND SHALL BE FLASHED AND SEALED WEATHER-TIGHT. ALL MATERIALS AND COLORS MUST BE PRE-APPROVED BY THE ARCHITECT. NEW OPENINGS AND/OR PENETRATIONS FOR MECHANICAL ITEMS SHALL BE CUT, SLEEVED, ETC. BY THE MECHANICAL CONTRACTOR. ALL OPENINGS SHALL BE CORE DRILLED OR SAW-CUT. NO “HAMMER DRILLING” WILL BE ALLOWED.
18. ROUTE DUCTWORK AS HIGH AS POSSIBLE TO FACILITATE ACCESS TO ABOVE CEILING SPACE. COORDINATE ROUTING WITH OTHER SERVICES AND TRADES. PROVIDE ADDITIONAL DUCTWORK, OFFSETS, ETC. TO ACCOMMODATE FIELD CONDITIONS AS REQUIRED FOR A COMPLETE AND FUNCTIONING SYSTEM AT NO ADDITIONAL COST. ADDITIONAL OFFSETS REQUIRE APPROVAL FROM THE ENGINEER. ROUTE DUCTWORK BETWEEN JOISTS WHERE POSSIBLE.
19. ALL AIR DEVICES LOCATED ABOVE GYPBOARD OR HARD CEILINGS SHALL HAVE ACCESSIBLE BALANCING DAMPERS.
20. ALL DUCTWORK SHALL BE CONSTRUCTED AND INSTALLED PER SMACNA HVAC DUCT CONSTRUCTION STANDARDS.
21. PROVIDE AND INSTALL DUCT ACCESS DOORS FOR INSPECTION OF ALL INSTALLED FIRE DAMPERS AS DIRECTED BY SMACNA HVAC CONSTRUCTION STANDARDS.
22. MAXIMUM FLEXIBLE DUCT LENGTH SHALL BE 5'-0". ALL FLEXIBLE DUCT SHALL CONFORM TO THE REQUIREMENTS OF UL 181 FLEXIBLE AIR DUCTS. SUPPORT TO ELIMINATE SAGGING AND KINKING. INSULATED FLEXIBLE DUCTS SHALL MEET MINIMUM R-VALUES REQUIRED BY THE IECC.
23. ALL HVAC EQUIPMENT TO BE INSTALLED PER MANUFACTURER'S REQUIREMENTS. UTILIZE FACTORY FILTERS DURING CONSTRUCTION.
24. THE MECHANICAL CONTRACTOR SHALL BALANCE SYSTEM TO AIR QUANTITIES INDICATED ON PLANS AND PROVIDE OWNERS REPRESENTATIVES WITH COMPLETE NEBB/AABC BALANCE REPORT. THE MECHANICAL CONTRACTOR SHALL PROVIDE AS MANY ADDITIONAL SITE VISITS BY THE LICENSED TAB CONTRACTOR AS REQUIRED BY THE ENGINEER FOR A COMPLETE AND FUNCTIONING AND APPROVED SYSTEM IN COMPLIANCE WITH THE CONTRACT DOCUMENTS.
25. ALL RECTANGULAR 90 DEG. AND 45 DEG. ELBOWS SHALL HAVE TURNING VANES.
26. PROVIDE A MANUAL VOLUME DAMPER AT ALL BRANCH TAKE-OFFS ON SUPPLY, RETURN, AND OUTSIDE AIR DUCTWORK AT NO ADDITIONAL COST. PROVIDE A MAIN RETURN DAMPER UPSTREAM OF OUTSIDE AIR CONNECTIONS IN RETURN AIR PLENUM DESIGNS. COORDINATE ADDITIONAL MANUAL VOLUME DAMPER LOCATIONS REQUIRED FOR A FULLY FUNCTIONAL SYSTEM WITH THE ENGINEER PRIOR TO ORDER, FABRICATION, OR INSTALLATION.
27. ALL DUCT DIMENSIONS SHOWN ARE INTERIOR “CLEAR” DUCT DIMENSIONS.
28. MAINTAIN 10'-0" MINIMUM CLEARANCE BETWEEN OUTDOOR AIR INTAKES AND EXHAUST, PLUMBING VENTS, ETC. AND/OR AS REQUIRED BY IMC, WHICHEVER IS MORE STRINGENT.
29. MAINTAIN 10'-0" MINIMUM CLEARANCE FROM EDGE OF ROOFTOP EQUIPMENT TO ROOF EDGE UNLESS RAILING OR PARAPET OF SUFFICIENT HEIGHT IS TO BE PROVIDED IN ACCORDANCE WITH ALL APPLICABLE CODES INCLUDING BUT NOT LIMITED TO: IBC, IMC, LOCAL CODES, OSHA GUIDELINES (WHERE APPLICABLE). REFER TO ARCHITECTURAL.
30. ALL CONTROL WIRING AND CONDUIT SHALL COMPLY WITH NEC.
31. MECHANICAL CONTRACTOR SHALL COORDINATE WITH ELECTRICAL CONTRACTOR AND DRAWINGS FOR CONNECTIONS AND LOCATION OF ALL EQUIPMENT.
32. CONTRACTOR SHALL PROVIDE ADDITIONAL OFFSETS OR BENDS IN PIPING AS REQUIRED TO ALLOW FOR EXPANSION AND CONTRACTION DUE TO TEMPERATURE CHANGES AND DIFFERENCES IN THE AMBIENT TEMPERATURE WHEN PIPING AND EQUIPMENT IS INSTALLED.
33. PROVIDE MANUAL AIR VENTS AT HIGH POINTS AND DRAIN VALVES AT LOW POINTS OF ALL HYDRONIC PIPING. AUTOMATIC AIR VENTS SHALL BE INSTALLED WHERE INDICATED IN THE CONTRACT DOCUMENTS AND/OR AS REQUIRED FOR A FULLY FUNCTIONAL SYSTEM.
34. MECHANICAL CONTRACTOR SHALL COORDINATE WITH THE ARCHITECTURAL PLANS AND GC/CM ALL AREAS WHERE MECHANICAL / ELECTRICAL EQUIPMENT AND DEVICES ARE INDICATED TO BE DEMOLISHED AND THE REQUIRED REPAIR AND RESTORATION OF ALL WALLS, ROOFS, CEILINGS, FLOORS, ETC. SHALL BE INCLUDED IN THEIR BID.
35. ALL ROOF PENETRATIONS SHALL BE IN COMPLIANCE WITH THE ROOFING MANUFACTURER'S GUIDELINES AND THE AMERICAN ROOFING COUNCIL. CONTRACTOR SHALL BE RESPONSIBLE FOR COMPLIANCE AS NECESSARY TO MAINTAIN ALL WARRANTIES.
36. STRUCTURAL MEMBERS SHALL NOT BE CUT OR COMPROMISED IN ANY WAY.
37. DO NOT BLOCK ACCESS TO HVAC OR ELECTRICAL EQUIPMENT. DO NOT INSTALL PIPING, DUCTWORK, OR EQUIPMENT OVER ELECTRICAL PANELS/SWITCHGEAR OR THE 30" x 42" (W x D) CLEARANCE IN FRONT OF THESE ELECTRICAL ITEMS. COORDINATE ADDITIONAL REQUIREMENTS WITH NEC.

MECHANICAL LEGEND

HVAC

SYMBOL	DESCRIPTION
	SUPPLY AIR DIFFUSER (4-WAY, 3-WAY, 2-WAY, 1-WAY)
	SUPPLY AIR DIFFUSER (ROUND)
	RETURN GRILLES
	EXHAUST GRILLES
	FLEXIBLE CONNECTION
	SUPPLY AIR DUCT (UP,- DOWN)
	RETURN AIR DUCT (UP,- DOWN)
	EXHAUST AIR DUCT (UP,- DOWN)
A.D.	ACCESS DOOR
	RECTANGULAR TO ROUND DUCTWORK TRANSITION
	RECTANGULAR TO RECTANGULAR TRANSITION
R	DUCT CHANGE IN ELEVATION; R= RISE, D= DROP
BD	DUCT SIZE BACKDRAFT DAMPER (ARROW INDICATES FLOW DIRECTION)
FD	FIRE DAMPER
	MANUAL VOLUME CONTROL BALANCE DAMPER
SD	SMOKE DAMPER
M	MOTORIZED DAMPER
FD SD	COMBINATION - FIRE / SMOKE DAMPER
	ELBOW WITH TURNING VANES
	ELBOW ROUND
	CONNECT NEW TO EXISTING
	INDICATES AIR FLOW DIRECTION
GV	GATE VALVE (HORIZ. - VERT.)
GLV	GLOBE VALVE (HORIZ. - VERT.)
BFV	BUTTERFLY VALVE (HORIZ. - VERT.)
BV	BALL VALVE (HORIZ. - VERT.)
	CONTROL VALVE (2-WAY, 3-WAY)
	TRIPLE-DUTY VALVE
P	PRESSURE GAUGE
T	TEMPERATURE GAUGE / THERMOMETER
	PRESSURE REDUCING VALVE
	STRAINER
	CHECK VALVE
	FLOW INDICATOR
	BALANCE VALVE
	EXISTING PIPING/DUCT/EQUIPMENT TO REMAIN
	EXISTING PIPING/DUCT/EQUIPMENT TO BE REMOVED
	CAP OR PLUG
	PIPE DOWN, PIPE UP
	INCREASER / REDUCER
FS	FLOW SWITCH (FS)
FM	FLOW METER (FM)(DDC)
TS	TEMP SENSOR (TS)(DDC)
	MANUAL AIR VENT
	AUTOMATIC AIR VENT
T	ROOM THERMOSTAT OR DUCT STAT
S	SENSOR (CO, CO2, ETC.)
H	HUMIDISTAT
X-XX / XXX	SUPPLY AIR DEVICE (S-1) / AIRFLOW (CFM)
XX-XX	EQUIPMENT IDENTIFICATION
X / MX.XX	DETAIL NO./ SHEET NO.
X / MX.XX	SECTION NO / SHEET NO.
XX	INDICATED TAG OR SHEET NOTE
XX	DEMOLITION NOTE
##	REVISION TAG
	EXTENT OF DEMOLITION
	EXPANSION JOINT

HVAC

SYMBOL	DESCRIPTION
	PIPE ANCHOR
	COMBINATION FLOW INDICATOR / BALANCING (4"-SMALLER)
36"	COMBINATION FLOW INDICATOR / BALANCING (5"-LARGER)
	TEMP./ PRESS. RELIEF VALVE
	FLANGED CONNECTION
	UNION
	FLEXIBLE CONNECTION
	PUMP

HVAC

SYMBOL	DESCRIPTION
CD	CONDENSATE DRAIN LINE
CWR	CHILLED WATER RETURN PIPING
CWS	CHILLED WATER SUPPLY PIPING
EA	EXHAUST AIR DUCTWORK
HR	HYDRONIC RETURN PIPING
HS	HYDRONIC SUPPLY PIPING
HPR	HIGH PRESSURE RETURN
HPS	HIGH PRESSURE STEAM
HWR	HOT WATER RETURN PIPING
HWS	HOT WATER SUPPLY PIPING
LPR	LOW PRESSURE RETURN
LPS	LOW PRESSURE STEAM
MPR	MEDIUM PRESSURE RETURN
MPS	MEDIUM PRESSURE STEAM
OA	OUTSIDE AIR DUCTWORK
R	REFRIGERANT LINE SET PIPING
RA	RETURN AIR DUCTWORK
SA	SUPPLY AIR DUCTWORK

ABBREVIATIONS

AFC	ABOVE FINISHED CEILING
AFF	ABOVE FINISHED FLOOR
AFG	ABOVE FINISHED GRADE
AHU-X	AIR HANDLING UNIT
AS-X	AIR SEPARATOR
ATV	AUTO. TEMPERING VALVE
B-X	BOILER
BTU	BRITISH THERMAL UNIT
BTUH	BRITISH THERMAL UNITS PER HOUR
C	COMMON
CAS-X	VARIABLE REFRIGERANT CASSETTE UNIT
CFM	CUBIC FEET PER MINUTE
CH-X	CHILLER
CT-X	COOLING TOWER
CU-X	CONDENSING UNIT
E-X	EXHAUST AIR DEVICE
EF-X	EXHAUST FAN DESIGNATION
EH-X	ELECTRIC HEATER
ERU-X	ENERGY RECOVERY UNIT
ESP	EXTERNAL STATIC PRESSURE
EXT-X	EXPANSION TANK
FCU-X	FAN COIL UNIT
FZT	FREEZSTAT
GBD	GRAVITY BACKDRAFT DAMPER
GPM	GALLONS PER MINUTE
HP	HORSEPOWER
HP-X	HEAT PUMP UNIT
HT-X	HEAT TRACE
HX-X	HEAT EXCHANGER
KW	KILOWATT
L-X	LOUVER DESIGNATION
MAU-X	MAKE-UP AIR UNIT
MBH	THOUSAND BRITISH THERMAL UNITS PER HOUR
NC	NORMALLY CLOSED
NO	NORMALLY OPEN
P-X	PUMP
PRV	PRESSURE REDUCING VALVE
R-X	RETURN AIR DEVICE
RTU-X	ROOFTOP UNIT
S-X	SUPPLY AIR DEVICE
SF-X	SUPPLY FAN DESIGNATION
SP	TOTAL STATIC PRESSURE
T-X	TRANSFER AIR DEVICE
VAV-X	VARIABLE AIR VOLUME BOX

SHERMAN CARTER BARNHART ARCHITECTS

STATE OF KENTUCKY ★ NICHOLAS C. MORGAN 21482 LICENSED PROFESSIONAL ENGINEER ★ 12/12/2019

SHROUT TATE WILSON MECHANICAL AND ELECTRICAL ENGINEERS
Lexington - Louisville
www.stweng.com

NEW SPENCER COUNTY BUS GARAGE
TAYLORSVILLE, KENTUCKY

MECHANICAL LEGEND

JOB NO.	1745
DATE	12/16/2019
DRAWN	BC
CHECKED	NM

COPYRIGHT © 2019
SHERMAN CARTER BARNHART
ARCHITECTS, PLLC

REVISIONS

No.	Description	Date

SHEET

M0

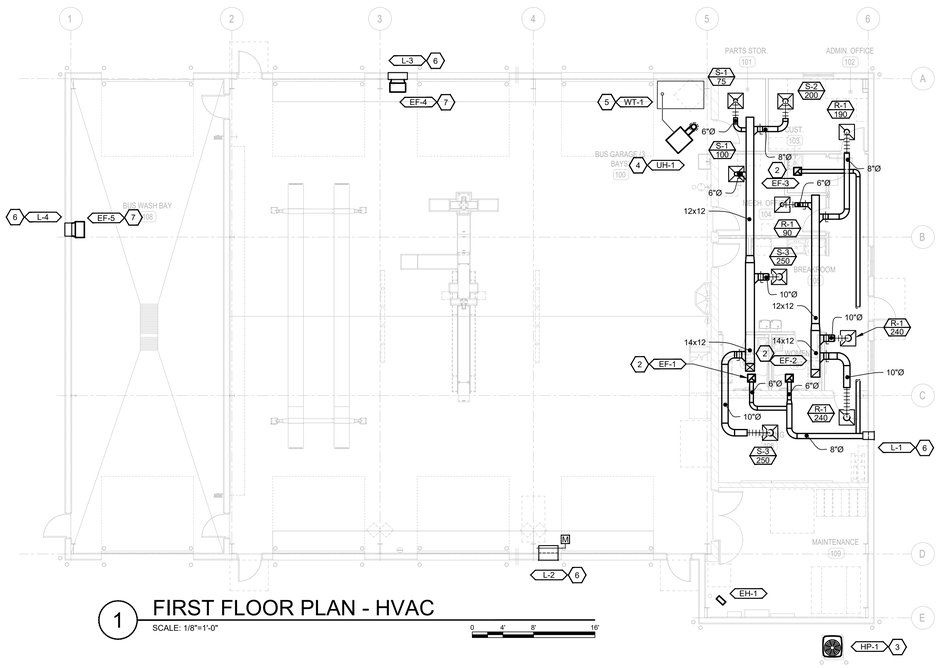

1 FIRST FLOOR PLAN - HVAC

SCALE: 1/8"=1'-0"

0 4' 8' 16'

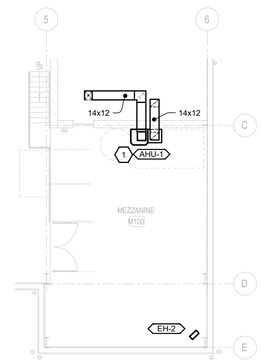

2 MEZZANINE PLAN - HVAC

SCALE: 1/8"=1'-0"

0 4' 8' 16'

SHEET KEYNOTES:

1. PROVIDE AND INSTALL NEW AIR HANDLING UNIT PER MANUFACTURERS INSTRUCTIONS WHERE INDICATED. ROUTE DUCT AS SHOWN AND PROVIDE WITH FILTER RACK.
2. PROVIDE AND INSTALL EXHAUST FAN PER MANUFACTURERS INSTRUCTIONS WHERE INDICATED.
3. PROVIDE AND INSTALL NEW HEAT PUMP UNIT ON EQUIPMENT PAD AND PUMP UPS WHERE INDICATED PER MANUFACTURERS INSTRUCTIONS. ROUTE REFRIGERANT PIPING TO AIR HANDLING UNIT.
4. PROVIDE AND INSTALL WASTE OIL UNIT HEATER PER MANUFACTURERS INSTRUCTIONS SUPPORTED FROM STRUCTURE ABOVE. ROUTE VENT PIPING THROUGH ROOF AND FLASH.
5. PROVIDE AND INSTALL WASTE OIL TANK WHERE INDICATED PER MANUFACTURERS INSTRUCTIONS.
6. PROVIDE AND INSTALL LOUVER WHERE INDICATED PER MANUFACTURERS INSTRUCTIONS. COORDINATE WITH STRUCTURE.
7. PROVIDE AND INSTALL EXHAUST FAN CONTROLLED BY SWITCH WHERE INDICATED PER MANUFACTURERS INSTRUCTIONS.

SHERMAN CARTER BARNHART ARCHITECTS

STATE OF KENTUCKY NICHOLAS C. MORGAN LICENSED PROFESSIONAL ENGINEER 12/16/2019

SHROUT TATE WILSON MECHANICAL AND ELECTRICAL ENGINEERS
Lexington - Louisville
www.ctweng.com

NEW SPENCER COUNTY BUS GARAGE

TAYLORSVILLE, KENTUCKY

FLOOR PLANS - MECHANICAL

JOB NO.	1745
DATE	12/16/2019
DRAWN	BC
CHECKED	NM

COPYRIGHT © 2019
SHERMAN CARTER BARNHART ARCHITECTS, PLLC

REVISIONS

No.	Description	Date

SHEET

M1

NOTE:
PROVIDE A MINIMUM OF FOUR (4) SHEET METAL SCREWS THRU 3-WRAPS OF DUCT TAPE TO SECURE FLEXIBLE DUCT TO THE SHEET METAL PRIOR TO INSTALLING THE 1/4" WIDE PLENUM RATED NYLON TIE. THE FLEXIBLE DUCT INSULATION SHALL BE SECURED WITH 3-WRAPS OF DUCT TAPE.

NOTE:
ALL MATERIALS USED FOR DUCT CONNECTION MUST BE PLENUM RATED.

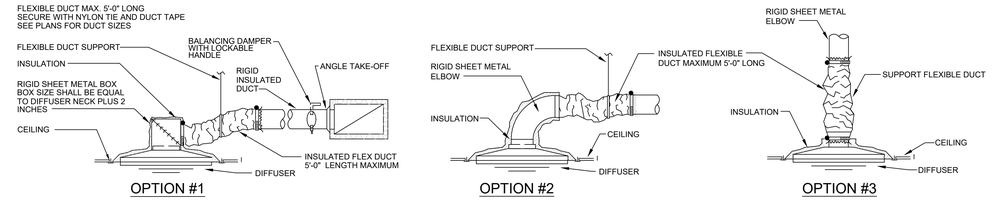

DIFFUSER RUNOUT DETAIL
NO SCALE

NOTE:
PROVIDE A MIN. OF FOUR (4) SHEET METAL THRU 3-WRAPS OF DUCT TAPE TO SECURE FLEXIBLE DUCT TO THE SHEET METAL PRIOR TO INSTALLING THE 1/4" WIDE PLENUM RATED NYLON TIE. THE FLEXIBLE DUCT INSULATION SHALL BE SECURED WITH 3-WRAPS OF DUCT TAPE.

NOTE:
ALL MATERIALS USED FOR DUCT CONNECTION MUST BE PLENUM RATED.

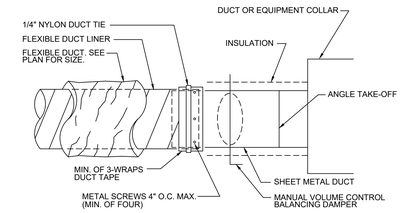

FLEXIBLE DUCT CONNECTION
NO SCALE

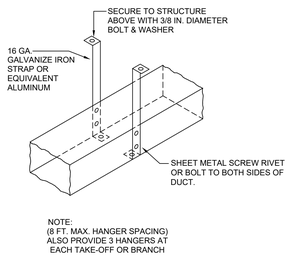

RECTANGULAR DUCT HANGER DETAIL
NO SCALE

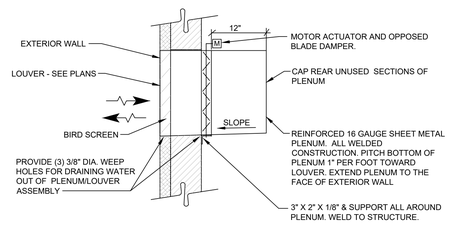

LOUVER WITH MOTORIZED DAMPER DETAIL
NO SCALE

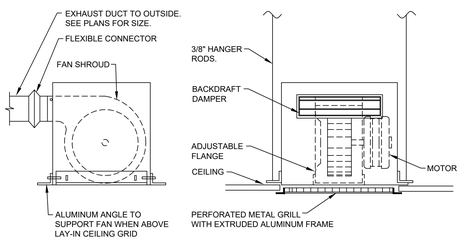

CEILING CABINET FAN
NO SCALE

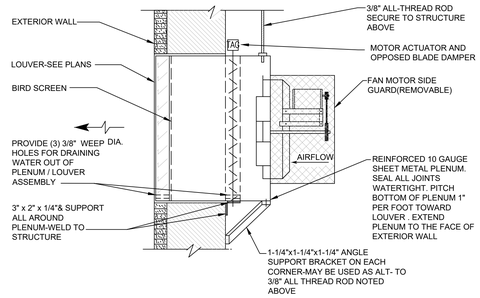

SIDEWALL PROPELLER FAN DETAIL
NO SCALE

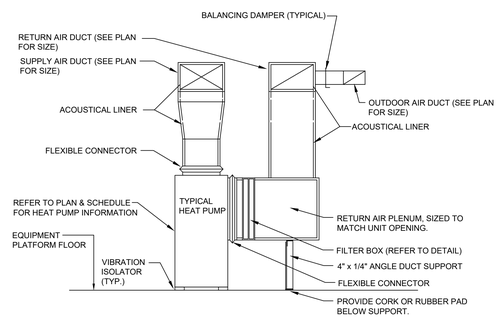

VERTICAL HEAT PUMP UNIT DETAIL
NO SCALE

SHERMAN CARTER BARNHART ARCHITECTS

STATE OF KENTUCKY NICHOLAS C. MORGAN LICENSED PROFESSIONAL ENGINEER 32423 12/12/2019

SHROUT TATE WILSON MECHANICAL AND ELECTRICAL ENGINEERS
Lexington - Louisville
www.ctweng.com

NEW SPENCER COUNTY BUS GARAGE
TAYLORSVILLE, KENTUCKY

MECHANICAL DETAILS

JOB NO.	1745
DATE	12/16/2019
DRAWN	BC
CHECKED	NM

COPYRIGHT © 2019
SHERMAN CARTER BARNHART ARCHITECTS, PLLC

REVISIONS

No.	Description	Date

SHEET
M2

WASTE OIL UNIT HEATER SCHEDULE

MARK	LOCATION	MANUFACTURER	MODEL NUMBER	GAS FLUE SIZE	GAS INFORMATION		ELECTRICAL			FAN MOTOR ELECTRICAL				CFM	REMARKS
					INPUT (MBH)	OUTPUT (MBH)	VOLT	PH	AMPS	HP	RPM	VOLT/PHASE	AMPS		
UH-1	BUS GARAGE	ENERGY LOGIC	EL-200H	6"	200	200	115	1	60	1/4	---	115/1/60	5.4	1,500	ALL

REMARKS:
1. Horizontal gas fired unit heater.
2. Provide gas flue as required by manufacturer and route as indicated on plans.
3. Provide wall mounted thermostat as indicated on drawing.
4. Install unit as high as possible.
5. Refer to specifications for additional information.

*Trane model numbers are used as basis of design.
Acceptable manufacturers shall include, Reznor, Sterling and Modine

SPLIT SYSTEM SCHEDULE

MARK	MANUFACTURER	MODEL	CFM	SEER	COOLING CAPACITY MBH	HEATING CAPACITY MBH (KW)	HEATING HPSF	ELEC. HEAT (KW)	ELECTRICAL				REMARKS
									V/Ø/Hz	RLA	MCA	MOCP	
OUTDOOR UNIT													
HP-1	GOODMAN	GSZ160301B	-	15	30,000	28,000	8.5		208/230/1/60	-	18	30	2,4,5,6,9,10
INDOOR UNIT													
AHU-1	GOODMAN	ARUF31B14	1000	-	-	-	-	8	230/1/60	-	38	40	1,2,4,7,8,10,11

REMARKS:
1. PROVIDE WITH 7-DAY PROGRAMMABLE THERMOSTAT AND OUTDOOR TEMPERATURE SENSOR FOR EMERGENCY HEAT.
2. R-410A REFRIGERANT
3. COMPLETE WITH CONDENSATE PUMP
4. INSTALL PER MANUFACTURER'S INSTRUCTIONS
5. HEATING CAPACITY AND HPSF RATED AT 47°F
6. MAXIMUM UNIT DIMENSIONS ARE 22"x19"x39.5" (WxDxH)
7. PROVIDE UNIT WITH SINGLE-POINT WIRING KIT.
8. INSTALL IN MECHANICAL CLOSET PER DRAWINGS. ENSURE PROPER CLEARANCES.
9. INSTALL UNIT ON SELF-LEVELING FEET (PUMP-UPS).
10. ALL EQUIPMENT MUST BE ENERGY STAR RATED.
11. PROVIDE WITH FACTORY MOUNTED INTEGRAL DISCONNECT.

OTHER ACCEPTABLE MANUFACTURERS INCLUDE: CARRIER, LUXAIRE, TRANE, YORK. REFER TO SPECIFICATIONS FOR ADDITIONAL REQUIREMENTS.

AIR DEVICE SCHEDULE

MARK	MANUFACTURER	MODEL	MAX CFM	MODULE	AIR PATTERN	NECK	MAX NC	REMARKS
S-1	KRUEGER	1400	100	24x24	4-WAY	6" ROUND	20	2,3,5
S-2	KRUEGER	1400	200	24x24	4-WAY	8" ROUND	20	2,3,5
S-3	KRUEGER	1400	400	24x24	4-WAY	10" ROUND	20	2,3,5
R-1	KRUEGER	S580	-	24x24	-	22x22	20	2,3,5

REMARKS:
1. SURFACED MOUNTED
2. LAY-IN TYPE
3. PROVIDE WITH WHITE FINISH
4. 1" SLOT WIDTH, 4-SLOT
5. COORDINATE AIR DEVICE LOCATIONS WITH REFLECTED CEILING PLANS PRIOR TO INSTALLATION. LIGHTING HAS PRIORITY OVER HVAC
6. OPPOSED BLADE DAMPER
7. DOUBLE DEFLECTION GRILLE
8. HINGED FILTER GRILLE WITH MINIMUM TWO THUMB SCREWS
9. SIDEWALL MOUNTED
10. LINEAR SLOT DIFFUSER
11. PROVIDE INSULATED PLENUM

OTHER ACCEPTABLE MANUFACTURERS INCLUDE: PRICE, TITUS. REFER TO SPECIFICATIONS FOR ADDITIONAL REQUIREMENTS.

ELECTRIC HEATER SCHEDULE

MARK	MANUFACTURER	MODEL	TYPE	CFM	BTUH	ELECTRICAL				REMARKS
						V/Ø/Hz	KW	MCA	MOCP	
EH-1,2	MARKEL	F1F5105	UNIT HEATER	400	17,100	208/1/60	5	24.1	30	1,4

REMARKS:
1. INTEGRAL THERMOSTAT AND DISCONNECT
2. INTEGRAL DISCONNECT AND WALL THERMOSTAT
3. INSTALL IN LAY-IN CEILING
4. PROVIDE REQUIRED MOUNTING BRACKET FOR MOUNTING AS INDICATED ON PLANS
5. SEMI-RECESSED WALL UNIT. BOTTOM OF UNIT SHALL BE AT 12" AFF
6

OTHER ACCEPTABLE MANUFACTURERS INCLUDE: Q-MARK, REDDI. REFER TO SPECIFICATIONS FOR ADDITIONAL REQUIREMENTS.

EXHAUST FAN SCHEDULE

MARK	MANUFACTURER	MODEL	CFM	ESP (IN H20)	SONES	DRIVE TYPE	RPM	ELECTRICAL				REMARKS
								V/Ø/Hz	HP	MCA	MOCP	
EF-1,2,3	COOK	GC-144	75	0.25	1.2	DIRECT	775	120/1/60	FRAC.	2.2	15	1,2,3,4,5
EF-4	COOK	20A17DA	2900	0.25	19.2	DIRECT	1646	208/1/60	1/3	3.1	15	1,2,3,4,5
EF-5	COOK	16A11DA	900	0.25	15.5	DIRECT	1140	208/1/60	1/6	5.1	15	1,2,3,4,5

REMARKS:
1. PROVIDE WITH UNIT MOUNTED DISCONNECT
2. PROVIDE WITH UNIT MOUNTED SPEED CONTROL
3. PROVIDE WITH APPROPRIATE BACKDRAFT DAMPER
4. CEILING MOUNTED WITH APPROPRIATE CEILING GRILLE
5. INTERLOCK WITH WALL SWITCH, COORDINATE WITH ELECTRICAL CONTRACTOR
6. SUPPORT FROM THE STRUCTURE
7. ROOF MOUNTED, DOWN BLAST, PROVIDE WITH APPROPRIATE ROOF CURB (MIN. 12"). ROOF SLOPE SHALL BE CONFIRMED PRIOR TO ORDERING ROOF CURB
8. INTERLOCK EXHAUST FAN TO THERMOSTAT AS INDICATED ON DRAWING M3.0. EXHASUT FAN SHALL ACTIVATE WHEN TEMPERATURE IN ROOM IS ABOVE 75 F (ADJ)

OTHER ACCEPTABLE MANUFACTURERS INCLUDE: CARNES, GREENHECK. REFER TO SPECIFICATIONS FOR ADDITIONAL REQUIREMENTS.

LOUVER SCHEDULE

MARK	MANUFACTURER	MODEL	INTAKE / EXHAUST	SIZE			CFM	PRESSURE DROP (IN)	FREE AREA (SQ FT)	VELOCITY (FPM)	REMARKS
				WIDTH	HEIGHT	DEPTH					
L-1	UNITED ENERTECH	BVE128	EXHAUST	12	8	4	150	0.09	0.236	800	1,2,3
L-2,3	UNITED ENERTECH	FL-D-4	EXHAUST/INTAKE	30	30	4	2900	0.14	2.86	900	1,2,3,4
L-4	UNITED ENERTECH	FL-D-4	EXHAUST	24	18	4	900	0.14	1.3	800	1,2,3,4

REMARKS:
1. LOUVER COLOR SELECTED BY ARCHITECT
2. COORDINATE ALL LOUVER LOCATIONS WITH ARCHITECT AND ENGINEER PRIOR TO INSTALLATION
3. ALUMINUM CONSTRUCTION
4. DRAINABLE BLADES
5. STORM PROOF LOUVER
6. MAXIMUM NC LEVEL OF 25
7. PROVIDE WITH FACTORY MOUNTED DAMPER ACTUATOR. CONTROLS CONTRACTOR SHALL PROVIDE REQUIRED POWER TO ACTUATOR.
8. PROVIDE BIRD SCREEN
9. PROVIDE INSECT SCREEN
10

OTHER ACCEPTABLE MANUFACTURERS INCLUDE: RUSKIN, GREENHECK. REFER TO SPECIFICATIONS FOR ADDITIONAL REQUIREMENTS.

SHERMAN CARTER BARNHART ARCHITECTS

SHROUT TATE WILSON MECHANICAL AND ELECTRICAL ENGINEERS
Lexington - Louisville
www.stweng.com

NEW SPENCER COUNTY BUS GARAGE
TAYLORSVILLE, KENTUCKY

MECHANICAL SCHEDULES

JOB NO.	1745
DATE	12/16/2019
DRAWN	BC
CHECKED	NM

COPYRIGHT © 2019
SHERMAN CARTER BARNHART ARCHITECTS, PLLC

REVISIONS

No.	Description	Date

SHEET
M3

ELECTRICAL LEGEND

LIGHTING

SYMBOL	DESCRIPTION
X X	SURFACE MOUNTED LUMINAIRE (NORMAL & EMERGENCY)
X X	RECESSED LUMINAIRE (NORMAL & EMERGENCY)
X X	WALL MOUNTED LUMINAIRE (NORMAL AND EMERGENCY)
X X	RECESSED LUMINAIRE (NORMAL AND EMERGENCY)
X X	SURFACE MOUNTED LUMINAIRE (NORMAL AND EMERGENCY)
X X	LINEAR PENDANT LUMINAIRE (NORMAL AND EMERGENCY)
X X	CIRCULAR LUMINAIRE (NORMAL AND EMERGENCY)
X X	WALL BRACKET LUMINAIRE (NORMAL AND EMERGENCY)
X X	INDUSTRIAL STRIP LUMINAIRE (NORMAL AND EMERGENCY)
X	TRACK LUMINAIRE
	CEILING FAN
X	TWO-HEAD EMERGENCY LIGHTING UNIT
X X	EMERGENCY REMOTE HEAD (SINGLE OR DOUBLE)
X X	EMERGENCY EXIT SIGN WITH COMBINATION EMERGENCY LUMINAIRE WALL AND CEILING MOUNT
X X	EMERGENCY EXIT SIGN - SINGLE FACE WITH ARROWS AS INDICATED WALL AND CEILING MOUNTED
X X	EMERGENCY EXIT SIGN - DOUBLE FACE
X	POLE MOUNTED LUMINAIRE
X	FLOOD OR SPOT LUMINAIRE
X	BOLLARD OR POST TOP LUMINAIRE
000	LIGHTING CONTROL ROOM TAG
PCS	PHOTOCELL
EPP	EMERGENCY POWER PACK
EBR	EMERGENCY BYPASS RELAY (UL924)
ETR	EMERGENCY TRANSFER CONTROL (UL1008)
BP	BATTERY PACK
LPP	LIGHTING CONTROL POWER PACK
LVR	LOW VOLTAGE LIGHTING RELAY PANEL
PLP	PLUG LOAD CONTROL PACK
C	CONTACTOR, POLES AS REQUIRED
DS	DAYLIGHT SENSOR
OS	DUAL TECHNOLOGY LOW VOLTAGE CORNER MOUNTED OCCUPANCY SENSOR WITH POWER PACK AND CEILING MOUNT BRACKET. MOUNT IN CEILING TILE UNLESS OTHERWISE NOTED.
OS	DUAL TECHNOLOGY LOW VOLTAGE CEILING MOUNTED, 360° OCCUPANCY SENSOR.
	LIGHTING CONTROL PANEL
$X	LIGHT SWITCH - SUBSCRIPT INDICATES THE FOLLOWING : 3 - 3 WAY, 4 - 4 WAY, K - KEY OPERATED, D - DIMMER, OS - LINE VOLTAGE OCCUPANCY SENSOR, L - LOW VOLTAGE, M - MANUAL MOTOR STARTER W/ HANDLE GUARD KIT AND PADLOCK. SEE LIGHTING CONTROL DIAGRAM SHEET FOR OTHER SUBSCRIPTS.

ONE LINE DIAGRAM

SYMBOL	DESCRIPTION
XXX	CIRCUIT BREAKER
GF	GROUND FAULT PROTECTION
VFD	VARIABLE FREQUENCY DRIVE
DMM	DIGITAL MONITORING METER
SPD	SURGE PROTECTION DEVICE
KWH	XXX
M	POWER METERING DEVICE
	NON FUSED SWITCH
XXX	FUSED SWITCH
XXX	FUSE
	RELAY (NORMALLY OPEN)
XXX	PANEL
	DOUBLE THROW SWITCH OR TRANSFER SWITCH
H O A	3 POSITION SELECTOR SWITCH: LOCAL-OFF-REMOTE HAND-OFF-AUTOMATIC
	GROUND
	ELECTRIC HEATER

POWER

SYMBOL	DESCRIPTION
X	TAMPER RESISTANT DUPLEX RECEPTACLE - SUBSCRIPT INDICATES THE FOLLOWING : C - ABOVE COUNTER, CM - CEILING MOUNTED, E - EMERGENCY, G - GROUND FAULT CIRCUIT INTERRUPTER, GB - BLANK FACE GROUND FAULT INTERRUPT, IG - ISOLATED GROUND, P - PLUG LOAD CONTROL, WP - WEATHER PROOF
X	TAMPER RESISTANT QUADRUPLEX RECEPTACLE
X	TAMPER RESISTANT SINGLE RECEPTACLE
X	TAMPER RESISTANT SPECIAL PURPOSE RECEPTACLE
X	TAMPER RESISTANT PEDESTAL MOUNTED RECEPTACLE
X	TAMPER RESISTANT FLOOR MOUNTED RECEPTACLE AND COVERPLATE. SEE PLAN FOR CONFIGURATION.
	POKE THRU BOX
	COMBO POKE THRU BOX
X	COMBINATION FLOOR BOX WITH THREE DUPLEX RECEPTACLES AND RJ45 DATA JACKS. PROVIDE WITH COVERPLATE. INSTALL CATEGORY UTP WET LOCATION CABLES IN A 1 INCH CONDUIT FROM THE DATA COMPARTMENT TO THE NEAREST MDF OR IDF (X - INDICATES THE NUMBER OF JACKS AND CABLES)
	EMERGENCY SHUT-OFF BUTTON
J	JUNCTION BOX
H	HAND DRYER
	DISCONNECT SWITCH (SIZE/FUSING/POLES/NEMA - OPTIONAL)
	ENCLOSED CIRCUIT BREAKER DISCONNECT (SIZE/POLES/NEMA - OPTIONAL)
	COMBINATION MOTOR STARTER AND DISCONNECT (SIZE/FUSING/POLES/NEMA - OPTIONAL)
	MOTOR STARTER (SIZE/FUSING/POLES/NEMA - OPTIONAL)
VFD	VARIABLE FREQUENCY DRIVE
	MOTOR
	CORD REEL
	CONDUIT TURNED DOWN
	CONDUIT TURNED UP
	CONDUIT WITH END CAP
	EQUIPMENT CONNECTION
	CONDUIT CONTINUATION
X	TRANSFORMER; X - INDICATES IDENTIFICATION
X X	SURFACE MOUNTED PANELBOARD/DISTRIBUTION PANEL; X - INDICATES IDENTIFICATION
X	FLUSH MOUNTED PANELBOARD; X - INDICATES IDENTIFICATION
X X	EXISTING SURFACE MOUNTED PANELBOARD/DISTRIBUTION PANEL; X - INDICATES IDENTIFICATION
X	EXISTING FLUSH MOUNTED PANELBOARD; X - INDICATES IDENTIFICATION
	GROUND ROD
	LOW-VOLTAGE CIRCUIT WITH CONDUCTOR TYPES AS REQUIRED BY THE MANUFACTURER FOR THE PARTICULAR SYSTEM.
	UTP LIGHTING CONTROL CABLE
	CIRCUIT CONNECTED TO EMERGENCY POWER
	SURFACE MOUNTED RACEWAY
4#8,1#10,1"C XX-XX	BRANCH CIRCUIT HOMERUN TO PANELBOARD. THE NUMBER OF TICK MARKS INDICATES THE NUMBER OF CONDUCTORS. LONG TICK MARKS REPRESENT UNGROUNDED CONDUCTORS. SHORT TICK MARKS REPRESENT GROUNDED CONDUCTORS (NEUTRAL). A GROUNDING CONDUCTOR (GROUND) SHALL BE INSTALLED WITH ALL CIRCUITS. TICK MARKS AND CONDUCTOR SIZES ARE ONLY SHOWN ON THE HOMERUN. INSTALL THE REQUIRED QUANTITY AND SIZE CONDUCTORS TO EACH DEVICE ON THE SAME CIRCUIT AS INDICATED ON THE DRAWINGS. MINIMUM CONDUCTOR SIZE = #12 MINIMUM CONDUIT SIZE = 3/4 INCH SUBSCRIPT EXAMPLE: 4#8 = (3) UNGROUNDED AND (1) NEUTRAL CONDUCTORS SIZE IF OTHER THAN #12 1#10 = GROUNDING CONDUCTOR SIZE IF OTHER THAN #12 1"C = CONDUIT SIZE A-1,3,5 = PANEL NAME - POLE POSITION IN PANEL
M	ELECTRICAL METER
	EXISTING UTILITY POLE
	NEW UTILITY POLE
	NEW UTILITY POLE WITH POLE MOUNTED TRANSFORMERS
	EXISTING UTILITY POLE WITH POLE MOUNTED TRANSFORMERS

DEMOLITION vs EXISTING LINE WEIGHTS

DEMO	EXISTING

FIRE ALARM

SYMBOL	DESCRIPTION
	FIRE ALARM MANUAL PULL STATION
	FIRE ALARM STROBE (WALL & CEILING)
	FIRE ALARM COMBINATION AUDIO/VISUAL APPLIANCE. (WALL & CEILING)
S H A H/CO SP CS	FIRE ALARM DEVICE - SUBSCRIPT INDICATES THE FOLLOWING : S - SMOKE DETECTOR, H - HEAT DETECTOR, A - ADDRESSABLE MODULE, CO - CARBON MONOXIDE DETECTOR, SP - SPEAKER, CS - COMBINATION SMOKE CARBON MONOXIDE DETECTOR.
XX	FIRE ALARM DUCT TYPE SMOKE DETECTOR
	WALL MOUNTED MAGNETIC DOOR HOLDER
	FLOOR MOUNTED MAGNETIC DOOR HOLDER
	FIRE ALARM TAMPER SWITCH
	FIRE ALARM FLOW SWITCH
FACP	FIRE ALARM CONTROL PANEL. PANEL IS RECESSED TYPE WHEN SHOWN WITHIN WALLS ON DRAWING.
FAA	FIRE ALARM ANNUNCIATOR. PANEL IS RECESSED TYPE WHEN SHOWN WITHIN WALLS ON DRAWING.

SYSTEMS

SYMBOL	DESCRIPTION
	EXISTING COMMUNICATIONS OUTLET
WAP WAP	DATA OUTLET FOR WIRELESS ACCESS POINT WITH TWO RJ45 DATA JACKS WITH TWO UTP CABLE IN SURFACE RACEWAY, ONE INCH CONDUIT OR CABLE TRAY TO THE NEAREST MDF OR IDF. (WALL & CEILING)
#V/#D	VOICE/DATA OUTLET WITH # VOICE AND # OF DATA JACKS AND # UTP CABLES IN SURFACE RACEWAY, ONE INCH CONDUIT, OR CABLE TRAY TO THE NEAREST MDF OR IDF (#V - INDICATES THE NUMBER OF VOICE JACKS AND CABLES, #D - INDICATES THE NUMBER OF DATA JACKS AND CABLES), C - ABOVE COUNTER, CG - CEILING MOUNTED
#V/#D	PEDESTAL MOUNTED VOICE/DATA OUTLET WITH #VOICE AND # DATA JACKS AND # RJ45 DATA JACKS AND # UTP WET LOCATION CABLES IN A 1 INCH CONDUIT TO THE NEAREST MDF OR IDF. (#V - INDICATES THE NUMBER OF VOICE JACKS AND CABLES, #D - INDICATES THE NUMBER OF DATA JACKS AND CABLES)
#V/#D	FLOOR BOX WITH # RJ45 DATA JACKS. PROVIDE WITH COVERPLATE. INSTALL # UTP WET LOCATION CABLES IN A 1 INCH CONDUIT FROM THE DATA COMPARTMENT TO THE NEAREST MDF OR IDF (# - INDICATES THE NUMBER OF JACKS AND CABLES)
V V	MULTIMEDIA OUTLET. 4 11/16" OUTLET BOX WITH TWO 1-1 1/4" CONDUITS TO ABOVE ACCESSIBLE CEILING. (WALL & CEILING)
V	VGA/RCA OUTLET WITH ONE VGA CONNECTOR AND TWO RCA CONNECTORS. INSTALL CABLES IN SURFACE RACEWAY, 1-1/4 INCH CONDUIT, J-HOOKS OR CABLE TRAY. THE VGA CABLE MUST BE RAPID RUN TYPE WITH REMOVABLE LEADS OR APPROVED EQUAL.
T	TELEVISION OUTLET WITH ONE F-TYPE CONNECTOR WITH COAXIAL CABLE IN SURFACE RACEWAY, 3/4 INCH CONDUIT, OR CABLE TRAY TO THE TELEVISION DISTRIBUTION SYSTEM
	PROJECTOR (CEILING & WALL MOUNT)
ACC	ADMINISTRATIVE CONTROL CENTER. CONNECT TO THE INTERCOM SYSTEM AS REQUIRED
DR	DOOR RELEASE BUTTON
	INTERCOM SPEAKER (CEILING; RECESSED WALL-MOUNTED; HORN-TYPE WALL MOUNTED
	INTERCOM SPEAKER WITH INTEGRAL VOLUME CONTROL (CEILING & WALL MOUNT)
	CEILING MOUNTED SELF-AMPLIFIED SPEAKER
SC SG SM	SOUND SYSTEM SPEAKER (SC - CAFETERIA; SG - GYMNASIUM; SM - MEDIA CENTER)
D A	SINGLE SIDED CLOCK (DIGITAL & ANALOG)
D A	DOUBLE SIDED CLOCK (DIGITAL & ANALOG)
M	MICROPHONE OUTLET
A	AUXILIARY INPUT OUTLET FOR THE LOCAL SOUND SYSTEM
	INTERCOM CALL BUTTON
	CABLE TRAY. MINIMUM DIMENSIONS AS INDICATED ON DRAWINGS.
	FLOOR MOUNTED FOUR POST DATA RACK, 84 INCHES TALL, 30 INCHES DEEP, WITH VERTICAL WIRE MANAGEMENT.
	FLOOR MOUNTED TWO POST DATA RACK, 84 INCHES TALL, 30 INCHES DEEP, WITH VERTICAL WIRE MANAGEMENT.
	DOORBELL PUSH BUTTON
	DOORBELL AUDIO/VISUAL NOTIFICATION DEVICE
	SECURITY SYSTEM SIREN
	SECURITY INTERCOM STATION
	SECURITY SYSTEM KEY PAD
CR	SECURITY SYSTEM CARD READER
	SECURITY SYSTEM AUDIO SENSOR
M X M X	SECURITY SYSTEM MOTION DETECTOR (CEILING & WALL); X - DEGREE OF MOTION
X	CEILING MOUNTED SECURITY SYSTEM CAMERA
X	WALL MOUNTED SECURITY SYSTEM CAMERA
DCS	DOOR CONTACT/POSITION SWITCH
A	PRESS PLATE FOR AUTOMATIC DOOR OPERATOR
AP	ACCESS POINTS WITH ELECTRIFIED DOOR HARDWARE

ABBREVIATIONS

±10'	+10' INDICATES THE MOUNTING HEIGHT OF THE DEVICE TO BOTTOM.
1Ø	1-PHASE
3Ø	3-PHASE
BTM	BOTTOM
C	DEVICE TO BE INSTALLED 4 INCHES ABOVE COUNTER BACKSPLASH.
CT	CURRENT TRANSFORMER
EOE	EXISTING OVERHEAD ELECTRIC
EOF	EXISTING OVERHEAD FIBER OPTIC
EOP	EXISTING OVERHEAD PRIMARY
EOS	EXISTING OVERHEAD SECONDARY
EOT	EXISTING OVERHEAD TELEPHONE
EUE	EXISTING UNDERGROUND ELECTRIC
EUF	EXISTING UNDERGROUND FIBER OPTIC
EUP	EXISTING UNDERGROUND PRIMARY
EUS	EXISTING UNDERGROUND SECONDARY
EUT	EXISTING UNDERGROUND TELEPHONE
EOTV	EXISTING OVERHEAD TELEVISION
EUTV	EXISTING UNDERGROUND TELEVISION
GF	GROUND FAULT PROTECTION
GND	GROUND
KWH	KILO WATT HOUR
OE	OVERHEAD ELECTRIC
OF	OVERHEAD FIBER OPTIC
OP	OVERHEAD PRIMARY
OS	OVERHEAD SECONDARY
OT	OVERHEAD TELEPHONE
OTV	OVERHEAD TELEVISION
PT	POTENTIAL TRANSFORMER
SPD	SURGE PROTECTIVE DEVICE
T	DEVICE TO BE WALL MOUNTED 72 INCHES ABOVE FINISHED FLOOR.
UE	UNDERGROUND ELECTRIC
UF	UNDERGROUND FIBER OPTIC
UP	UNDERGROUND PRIMARY
US	UNDERGROUND SECONDARY
UT	UNDERGROUND TELEPHONE
UTP	UNSHIELDED TWISTED PAIR
UTV	UNDERGROUND TELEVISION
W	DEVICE TO BE WALL MOUNTED 48 INCHES ABOVE FLOOR.
WG	PROVIDE DEVICE WITH MANUFACTURER'S WIREGUARD.
WP	PROVIDE DEVICE WITH WEATHERPROOF COVER. RECEPTACLES TO BE WEATHER-RESISTANT TYPE AND PROVIDED WITH A CAST ALUMINUM, EXTRA DUTY, WHILE-IN-USE COVER.

ELECTRICAL DEVICE MOUNTING HEIGHTS

SWITCHES	48 INCHES TO TOP
INTERIOR RECEPTACLES	16 INCHES TO BOTTOM
EXTERIOR RECEPTACLES	24 INCHES TO BOTTOM
COMMUNICATIONS / DATA OUTLETS	16 INCHES TO BOTTOM
FIRE ALARM MANUAL PULL STATIONS	48 INCHES TO TOP
FIRE ALARM HORN/STROBE SIGNAL	80 INCHES TO BOTTOM
FIRE ALARM STROBE SIGNAL	80 INCHES TO BOTTOM
WALL TELEPHONES	48 INCHES TO TOP
TELEVISION OUTLETS	72 INCHES TO BOTTOM
CLOCKS	96 INCHES TO TOP

NOTE: MOUNTING HEIGHTS UNLESS OTHERWISE NOTED ON DRAWINGS.

LOW-VOLTAGE CABLING COLOR STANDARDS

WAPs	YELLOW
DATA	BLUE
SECURITY CAMERAS	ORANGE

SHERMAN CARTER BARNHART ARCHITECTS

SHROUT TATE WILSON MECHANICAL AND ELECTRICAL ENGINEERS
Lexington - Louisville
www.stweng.com

NEW SPENCER COUNTY BUS GARAGE

TAYLORSVILLE, KENTUCKY

ELECTRICAL LEGEND

JOB NO.	1745
DATE	12/16/2019
DRAWN	JE
CHECKED	WC

COPYRIGHT © 2019
SHERMAN CARTER BARNHART ARCHITECTS, PLLC

REVISIONS

No.	Description	Date

SHEET

E0

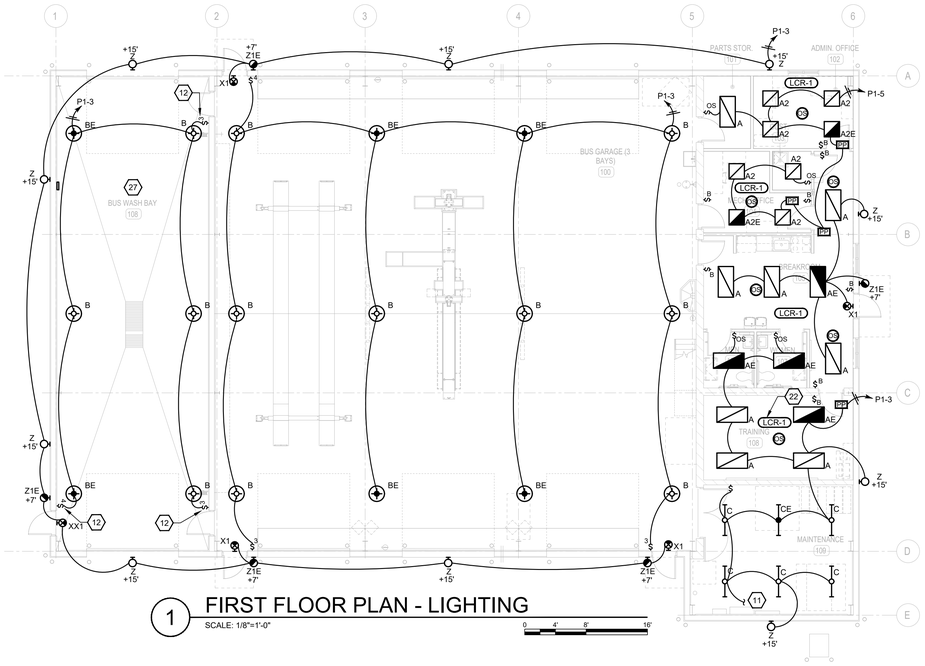

1 FIRST FLOOR PLAN - LIGHTING

SCALE: 1/8"=1'-0"

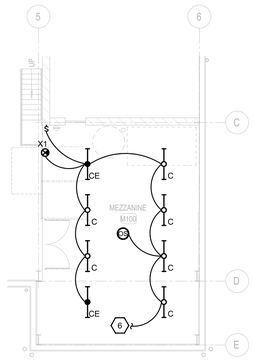

2 MEZZANINE PLAN - LIGHTING

SCALE: 1/8"=1'-0"

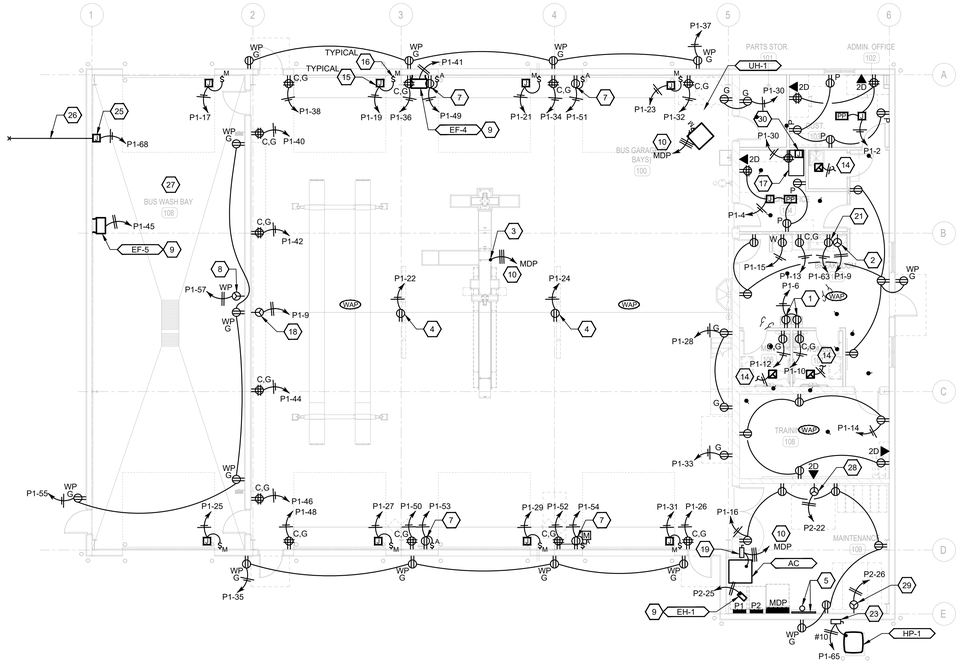

3 FIRST FLOOR PLAN - POWER & SYSTEMS

SCALE: 1/8"=1'-0"

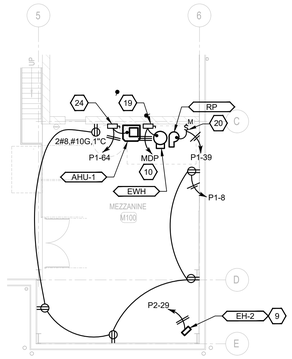

4 MEZZANINE PLAN - POWER & SYSTEMS

SCALE: 1/8"=1'-0"

GENERAL NOTES:

1. REFER TO GENERAL NOTES ON SHEET E2.

SHEET KEYNOTES:

1. RECEPTACLE FOR WATER COOLER TO BE INSTALLED BEHIND WATER COOLER ENCLOSURE. COORDINATE MOUNTING REQUIREMENTS PER FINAL WATER COOLER SHOP DRAWING.
2. RECEPTACLE FOR OVEN/RANGE. COORDINATE RECEPTACLE CONFIGURATION WITH OWNER PROVIDED EQUIPMENT. CIRCUIT TO BE 3#8, 1#10, 1"C.
3. PROVIDE ELECTRICAL CONNECTION TO BUS LIFT. ELECTRICAL CONNECTION TO TAKE PLACE IN BUS LIFT TRENCH, ROUGH-IN UNDER SLAB. COORDINATE WITH FINAL LIFT SHOP DRAWING FOR EXACT ROUGH-IN LOCATION AND REQUIREMENTS.
4. CEILING MOUNTED DUPLEX RECEPTACLE FOR TWO (2) RETRACTABLE CORD REELS AT THIS LOCATION. ONE CORD REEL TO HAVE A DUPLEX RECEPTACLE, 40' SJO CORD, RECEPTACLE TO HANG 84" AFF, AS MANUFACTURED BY HUBBELL MODEL #HBLC40123TT OR EQUAL. OTHER CORD REEL TO HAVE LED WORK LIGHT, 40' SJO CORD, WORK LIGHT TO HANG 84" AFF, AS MANUFACTURED BY HUBBELL MODEL #HBLC40182LED OR EQUAL.
5. 3/4" FLAME RETARDANT PLYWOOD BACKBOARD FOR TELECOMMUNICATION DEMARCS, ONE (1) 3" TELECOMMUNICATION CONDUIT TO STUB OUT IN MECHANICAL ROOM (REFER TO SITE PLAN ON SHEET U2 FOR CONDUIT ROUTING). KEEP STUB OUT TIGHT TO EXTERIOR WALL.
6. TO LIGHTING CIRCUIT IN ROOM BELOW.
7. SWITCHED CONTROLLED DUPLEX RECEPTACLE TO BE INSTALLED 96" AFF FOR WALL MOUNTED FANS. CENTER RECEPTACLE ON SECTION OF WALL. SWITCH TO BE INSTALLED AT STANDARD HEIGHT. FANS PROVIDED BY OTHERS.
8. RECEPTACLE FOR POWER WASHER. COORDINATE RECEPTACLE CONFIGURATION WITH OWNER PROVIDED EQUIPMENT. RECEPTACLE TO HAVE WEATHERPROOF WHILE IN USE COVER.
9. EQUIPMENT PROVIDED WITH FACTORY DISCONNECT.
10. REFER TO ONE-LINE POWER DIAGRAM FOR FEEDER DETAILS.
11. TO LIGHTING CIRCUIT ON MEZZANINE ABOVE.
12. LIGHT SWITCHES IN THIS AREA TO HAVE WEATHER PROOF COVER.
13. NOT USED.
14. EXHAUST FAN TO BE POWERED AND CONTROLLED BY LIGHTING CIRCUIT IN SPACE.
15. PROVIDE ELECTRICAL CONNECTION TO OVERHEAD DOOR MOTOR. PROVIDE INTERCONNECTION BETWEEN MOTOR AND DOOR CONTROL SWITCH PER MANUFACTURER'S REQUIREMENTS. DOOR CONTROL SWITCH PROVIDED WITH EQUIPMENT. TYPICAL FOR ALL OVERHEAD DOORS.
16. PROVIDE A 120V, 20A, MOTOR RATED TOGGLE SWITCH FOR DISCONNECTING MEANS OF THE OVERHEAD DOOR. TYPICAL FOR ALL OVERHEAD DOORS.
17. FREESTANDNG DATA CABINET. REFER TO SPECIFICATION FOR FREESTANDING DATA CABINET REQUIREMENTS.
18. RECEPTACLE FOR PORTABLE WELDER. RECEPTACLE CONFIGURATION TO BE NEMA 6-50R.
19. PROVIDE A 240V, 3-POLE, 100A, NON-FUSED DISCONNECT SWITCH.
20. PROVIDE A 120V, 15A, MOTOR RATED TOGGLE SWITCH FOR DISCONNECTING MEANS OF RECIRC PUMP.
21. RECEPTACLE FOR MICROWAVE ABOVE STOVE. CONCEAL RECEPTACLE IN CASEWORK. COORDINATE LOCATION WITH CASEWORK CONTRACTOR.
22. REFER TO TYPICAL LIGHTING CONTROL RISER ON SHEET E3.
23. PROVIDE A 240V, 2-POLE, 30A, NON-FUSED DISCONNECT SWITCH.
24. PROVIDE A 240V, 2-POLE, 60A, NON-FUSED DISCONNECT SWITCH.
25. PROVIDE ELECTRICAL CONNECTION TO WALL MOUNTED TANK CONTROL/ALARM PANEL. COORDINATE EXACT LOCATION WITH CONTRACTOR.
26. PROVIDE 1" CONDUIT ROUGH-IN FROM CONTROLLER LOCATED INSIDE WASH BAY TO UNDERGROUND TANK LOCATED OUTSIDE. COORDINATE WITH CONTRACTOR.
27. ALL EXPOSED CONDUIT BELOW THE HEIGHT OF INTERIOR WALL COVERING IN THIS AREA SHALL BE RMC.
28. RECEPTACLE TIRE CHANGER. COORDINATE RECEPTACLE CONFIGURATION WITH OWNER PROVIDED EQUIPMENT.
29. RECEPTACLE TIRE BALANCER. COORDINATE RECEPTACLE CONFIGURATION WITH OWNER PROVIDED EQUIPMENT.
30. RECESSED 12"X12" PULL BOX BEHIND DATA CABINET FOR DATA CABLING, INSTALL 18" AFF.

SHERMAN CARTER BARNHART ARCHITECTS

SHROUT TATE WILSON MECHANICAL AND ELECTRICAL ENGINEERS
Lexington - Louisville
www.stweng.com

NEW SPENCER COUNTY BUS GARAGE

TAYLORSVILLE, KENTUCKY

FLOOR PLANS - ELECTRICAL

JOB NO.	1745
DATE	12/16/2019
DRAWN	JE
CHECKED	WC

COPYRIGHT © 2019
SHERMAN CARTER BARNHART ARCHITECTS, PLLC

REVISIONS

No.	Description	Date

SHEET

E1

GENERAL NOTES:

SITE UTILITIES:

1. COORDINATE ALL SITE UTILITY WORK WITH THE FOLLOWING:

   POWER COMPANY - SALT RIVER ELECTRIC
   CONTACT - DANIEL CARRICO
   EMAIL - DCARRICO@SRELECTRIC.COM
   PHONE - 502-350-1606

   DISTRICT FIBER - SPENCER COUNTY SCHOOLS
   CONTACT - ERIC CECIL
   EMAIL - ERIC.CECIL@SPENCER.KYSCHOOLS.US
   PHONE - 502-477-0006

2. ALL COSTS FROM THE UTILITY COMPANIES LISTED ABOVE SHALL BE THE ELECTRICAL CONTRACTOR'S FINANCIAL RESPONSIBILITY.

3. CONDUCTORS FOR REMOVED DEVICES SHALL BE REMOVED. EXISTING UNDERGROUND CONDUITS MAY BE ABANDONED IN PLACE. ENDS OF THE EXISTING CONDUITS SHALL BE REMOVED TO 30 INCHES BELOW GRADE AND CAPPED.

4. KY B.U.D: BEFORE YOU DIG PHONE 1-800-752-6007. THE UNDERGROUND UTILITIES SHOWN ON THESE DRAWINGS ARE FROM SITE SURVEYS, RECORD DRAWINGS AND FROM VISUAL SITE INSPECTIONS. UTILITY LOCATIONS ARE APPROXIMATE AND THERE MAY BE OTHER UNDERGROUND UTILITIES IN THE AREA. CONTACT ALL UTILITY COMPANIES PRIOR TO BEGINNING ANY EXCAVATION.

5. IF ANY CHARTED, UNCHARTED OR MISLOCATED UTILITY SERVICE IS INTERRUPTED, THE CONTRACTOR WILL WORK CONTINUOUSLY TO RESTORE SERVICE TO THE SATISFACTION OF THE OWNER/ARCHITECT.

6. COORDINATE ALL ELECTRICAL SITE WORK (DEMOLITION AND NEW INSTALLATIONS) WITH THE NEW SITE GRADING.

7. UNDERGROUND CONDUITS SHALL BE BURIED A MINIMUM OF 30-INCHES BELOW GRADE UNLESS OTHERWISE NOTED.

LIGHTING

1. THE CONTRACTOR SHALL INSTALL THE REQUIRED NUMBER OF CONDUCTORS BETWEEN SWITCHES, LIGHT FIXTURES AND ASSOCIATED DEVICES FOR A COMPLETE AND WORKING SYSTEM. PROVIDE SINGLE-LEVEL OR DUAL-LEVEL SWITCHING, THREE-WAY SWITCHING OR OTHER SWITCHING METHOD AS INDICATED ON THE DRAWINGS.

2. INSTALL AN UNSWITCHED CONDUCTOR TO ALL EXIT LIGHTS, EMERGENCY LIGHTS AND ALL OTHER FIXTURES USED FOR EMERGENCY ILLUMINATION AND SUPPLIED WITH INTEGRAL OR EXTERNAL BATTERIES. INSTALL A NORMAL UNSWITCHED CONDUCTOR TO ALL EMERGENCY RELAYS WHEN EMERGENCY POWER IS PROVIDED BY A GENERATOR OR MEANS OTHER THAN BATTERY POWER. THE UNSWITCHED CONDUCTOR SHALL BE FED FROM THE SAME CIRCUIT AS THE SWITCHED CONDUCTOR(S).

3. CABLING ASSOCIATED WITH THE LOW VOLTAGE LIGHTING CONTROLS, INCLUDING DIMMING, NETWORK AND CONTROL CABLES, SHALL BE INSTALLED AND SUPPORTED IN A SIMILAR MANNER AS THE TELECOMMUNICATIONS CABLING. CABLING SHALL BE INSTALLED IN CONDUIT WHEN LOCATED IN AREAS WITH EXPOSED CEILINGS OR STRUCTURES, ABOVE INACCESSIBLE CEILINGS AND WHERE LOCATED WITHIN WALLS. CABLING INSTALLED ABOVE ACCESSIBLE, CONCEALED CEILINGS SHALL BE INSTALLED IN CONDUIT OR SHALL BE SUPPORTED BY J-HOOKS. THE CABLING SHALL BE INSTALLED SEPARATE FROM LINE VOLTAGE CONDUCTORS AND TELECOMMUNICATIONS CABLING. J-HOOKS MAY BE ATTACHED TO THE OUTSIDE OF THE TELECOMMUNICATIONS CABLE TRAY, IF AVAILABLE, PROVIDING THE MAXIMUM RATED WEIGHT CAPACITY OF THE CABLE TRAY IS NOT EXCEEDED.

SYSTEMS

1. ALL ELECTRICALLY CONDUCTIVE CABLES THAT ARE CONNECTED TO EXTERIOR MOUNTED DEVICES SHALL BE PROVIDED WITH A SURGE PROTECTIVE DEVICE. INCLUDING, BUT NOT LIMITED TO, FIRE ALARM CABLES FOR TAMPER AND FLOW SWITCHES, SECURITY CAMERAS AND INTERCOM SPEAKERS.

SURFACE RACEWAY

1. ALL SURFACE RACEWAYS SHALL BE WIREMOLD V700, AND V2400 SERIES OR APPROVED EQUAL UNLESS NOTED OTHERWISE.

2. V700 SERIES SHALL BE USED FOR RECEPTACLES, SWITCHES AND FIRE ALARM DEVICES. V2400 SERIES SHALL BE INSTALLED FOR VOICE AND DATA CABLING.

3. ALL SURFACE RACEWAY IS TO BE MOUNTED ON EXISTING WALLS ONLY. USE SUPPORTING CLIPS AND NOT MOUNTING STRAPS. THE CONTRACTOR HAS THE OPTION TO FISH FLEXIBLE CONDUIT DOWN EXISTING WALLS IN LIEU OF USING SURFACE RACEWAY.

4. COORDINATE THE ROUTING OF ALL RACEWAY WITH WALL MOUNTED FURNISHINGS (I.E. TACKBOARDS, MARKERBOARDS, INTERACTIVE WHITEBOARDS, ETC.).

SHERMAN CARTER BARNHART
ARCHITECTS

SHROUT TATE WILSON
MECHANICAL AND ELECTRICAL ENGINEERS
Lexington - Louisville
www.stweng.com

NEW SPENCER COUNTY BUS GARAGE

TAYLORSVILLE, KENTUCKY

ELECTRICAL GENERAL NOTES

JOB NO.	1745
DATE	12/16/2019
DRAWN	JE
CHECKED	WC

COPYRIGHT © 2019
SHERMAN CARTER BARNHART
ARCHITECTS, PLLC

REVISIONS

No.	Description	Date

SHEET

E2

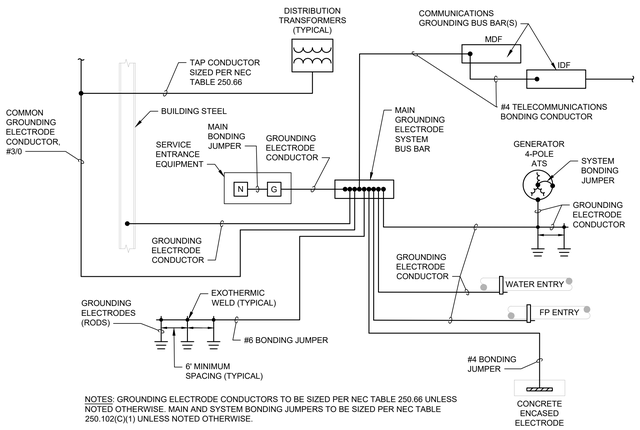

NOTES: GROUNDING ELECTRODE CONDUCTORS TO BE SIZED PER NEC TABLE 250.66 UNLESS NOTED OTHERWISE. MAIN AND SYSTEM BONDING JUMPERS TO BE SIZED PER NEC TABLE 250.102(C)(1) UNLESS NOTED OTHERWISE.

ELECTRICAL SYSTEM GROUNDING DETAIL

NOT TO SCALE

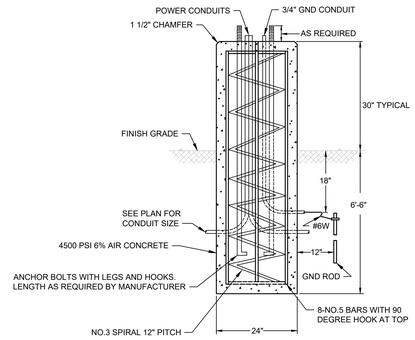

TALL POLE BASE DETAIL

NOT TO SCALE

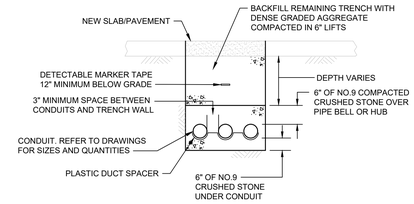

TRENCH DETAIL FOR NEW SLAB/PAVEMENT

NOT TO SCALE

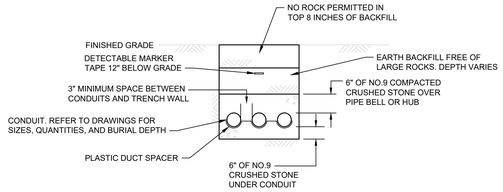

TRENCH DETAIL FOR EARTH COVER

NOT TO SCALE

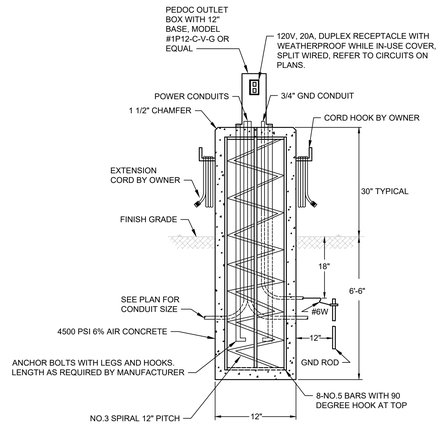

BUS PLUG POLE BASE DETAIL

NOT TO SCALE

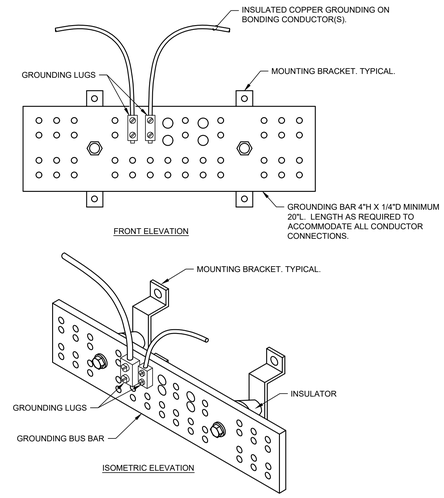

GROUNDING BUS BAR DETAIL

NOT TO SCALE

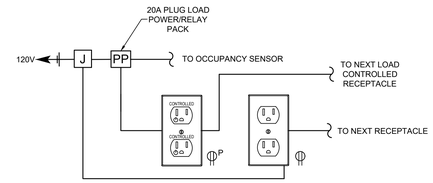

CONTROLLED RECEPTACLE DETAIL

NOT TO SCALE

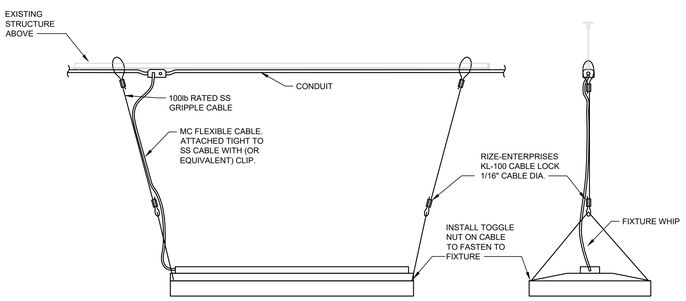

SUSPENDED LIGHT FIXTURE MOUNTING DETAIL

NOT TO SCALE

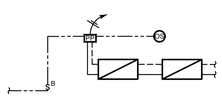

ZONE CONTROL

1. MANUAL ON/OFF BY SWITCH WHEN OCCUPANCY DETECTED.
2. MANUAL RAISE/LOWER BY SWITCH.
3. AUTO-OFF AFTER NO OCCUPANCY DETECTED FOR 15 MINUTES.

LCR-1 TYPICAL LIGHTING CONTROL RISER

NOT TO SCALE

LIGHTING	
SYMBOL	DESCRIPTION
$^{A}	ON/OFF (nLIGHT nPODM;...)
$^{B}	ON/OFF, RAISE/LOWER (nLIGHT nPODM DX;...)
$^{C}	2-ZONE, ON/OFF (nLIGHT...; WATTSTOPPER...)
$^{E}	2-ZONE, ON/OFF, RAISE/LOWER (nLIGHT...; WATTSTOPPER...)
$^{F}	OCCUPANCY SENSOR, ON/OFF (nLIGHT...; WATTSTOPPER...)
$^{G}	OCCUPANCY SENSOR, ON/OFF, RAISE/LOWER (nLIGHT...; WATTSTOPPER...)
$^{H}	4-ZONE, ON/OFF, RAISE/LOWER (nLIGHT...; WATTSTOPPER...)
$^{L}	LOW VOLTAGE (nLIGHT nPODM;...)
PP $_{a}	POWER PACK - 'a' SUBSCRIPT INDICATES ZONE (nLIGHT nPP16D; WATTSTOPPER...)
RS $_{a}	EMERGENCY POWER PACK - 'a' SUBSCRIPT INDICATES ZONE (nLIGHT...)
PL $_{a}	PLUG LOAD CONTROL POWER PACK - 'a' SUBSCRIPT INDICATES ZONE (nLIGHT...)
	LIGHT FIXTURE DRIVER. REFER TO LIGHT FIXTURE SCHEDULE - 'a' SUBSCRIPT INDICATES ZONE CONTROL.
S	RJ45 SPLITTER
OS	360 DEGREE DUAL TECHNOLOGY OCCUPANCY SENSOR (nLIGHT...)
OS	CORNER MOUNTED, DUAL TECHNOLOGY OCCUPANCY SENSOR (nLIGHT...)
DL	DAYLIGHT SENSOR (nLIGHT...; WATTSTOPPER...)
– – – – – – – –	2#18 DIMMING CONDUCTOR CABLE
— – – — – – —	CATEGORY 5E UTP NETWORK CABLE

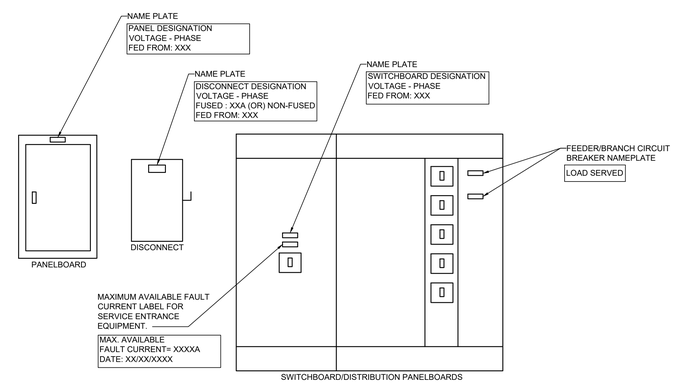

NOTE:

1. THIS DETAIL IS A REPRESENTATION OF THE LABELING REQUIREMENTS FOR ELECTRICAL EQUIPMENT. ALL ELECTRICAL EQUIPMENT, WHETHER IT IS EXPLICIT SHOWN OR NOT, SHALL BE LABELED IN A SIMILAR MANNER.
2. ALL LABELS SHALL BE ENGRAVED LAMINATED ACRYLIC. THE EQUIPMENT DESIGNATION SHALL HAVE A MINIMUM TEXT HEIGHT OF 3/8". THE REMAINING TEXT SHALL HAVE A MINIMUM HEIGHT OF 1/8".
3. LABELS FOR EQUIPMENT CONNECTED TO THE NORMAL POWER SYSTEM SHALL BE BLACK WITH WHITE TEXT. LABELS FOR EQUIPMENT CONNECTED TO THE EMERGENCY POWER SYSTEM SHALL BE RED WITH WHITE TEXT.
4. NAMEPLATES FOR EQUIPMENT LOCATED IN THE INTERIOR OF THE BUILDING SHALL BE ATTACHED WITH 3M SELF-ADHESIVES. EQUIPMENT INSTALLED AT EXTERIOR OF THE BUILDING SHALL BE ATTACHED WITH SCREWS AND THE LABEL SHALL HAVE PRE-PUNCHED OR PREDRILLED HOLES.

ELECTRICAL EQUIPMENT IDENTIFICATION

NOT TO SCALE

SHERMAN CARTER BARNHART ARCHITECTS

SHROUT TATE WILSON MECHANICAL AND ELECTRICAL ENGINEERS
Lexington - Louisville
www.stweng.com

NEW SPENCER COUNTY BUS GARAGE

TAYLORSVILLE, KENTUCKY

ELECTRICAL DETAILS

JOB NO.	1745
DATE	12/16/2019
DRAWN	JE
CHECKED	WC

COPYRIGHT © 2019
SHERMAN CARTER BARNHART ARCHITECTS, PLLC

REVISIONS

No.	Description	Date

SHEET

E3

LIGHT FIXTURE SCHEDULE

FIXTURE TYPE	DESCRIPTION	LAMPS						VOLTS	MOUNTING TYPE	MANUFACTURER - MODEL NUMBER	NOTES
		TYPE	CRI	DIMMING	COLOR TEMP	LUMENS	WATTS				
A	RECESSED 2x4' TROFFER LED	LED	>80	0-10V, @ 1%	4000K	5039	38	MVOLT	RECESSED GRID	LITHONIA - 2BLT4-48L-ADP-MVOLT-EZ1-LP840 EATON EQUAL HUBBELL EQUAL	1
AE	SAME AS TYPE 'A' WITH BACKUP BATTERY/DRIVER	LED	>80	0-10V, @ 1%	4000K	5039	38	MVOLT	RECESSED GRID	LITHONIA - 2BLT4-48L-ADP-MVOLT-EZ1-LP840-EL14L EATON EQUAL HUBBELL EQUAL	1
A2	RECESSED 2x2' TROFFER LED	LED	>80	0-10V, @ 1%	4000K	4105	32	MVOLT	RECESSED GRID	LITHONIA: 2BLT2-48L-ADP-MVOLT-EZ1-LP840 EATON EQUAL HUBBELL EQUAL	1
A2E	SAME AS TYPE 'A2' WITH BACKUP BATTERY/DRIVER	LED	>80	0-10V, @ 1%	4000K	3900	38	MVOLT	RECESSED GRID	LITHONIA: 2BLT2-48L-ADP-MVOLT-EZ1-LP840-EL14L EATON EQUAL HUBBELL EQUAL	1
B	ROUND FORM FACTOR, WET LOCATION, LED HIGHBAY WITH SURFACE MOUNT BRACKET	LED	>80	NO	4000K	26559	181	MVOLT	SURFACE	LITHONIA: JEBL-24L-40K-80CRI-WH EATON EQUAL HUBBELL EQUAL	1, 3
BE	SAME AS TYPE 'B' WITH BACKUP BATTERY/DRIVER	LED	>80	NO	4000K	26559	181	MVOLT	SURFACE	LITHONIA: JEBL-24L-40K-80CRI-WH IOTA: IIS-125-SM EATON EQUAL HUBBELL EQUAL	1, 3
C	4' LED STRIP, WITH CHAIN MOUNT KIT AND WIRE GUARD ACCESSORY	LED	>80	NO	4000K	5332	34.8	MVOLT	SUSPENDED	LITHONIA: CLX-L48-5000LM-SEF-RDL-HC36-WGCLX48 EATON EQUAL HUBBELL EQUAL	1
CE	SAME AS TYPE 'C' WITH BACKUP BATTERY/DRIVER	LED	>80	NO	4000K	5332	34.8	MVOLT	SUSPENDED	LITHONIA: CLX-L48-5000LM-SEF-RDL-HC36-WGCLX48 IOTA: IIS-35-I EATON EQUAL HUBBELL EQUAL	1
Z	EXTERIOR LED WALLPACK, WITH INTEGRAL PHTOCELL	LED	>70	NO	4000K	11800	87	MVOLT	SURFACE	LITHONIA: TWR2-LED-AL0-40K-MVOLT-DDBTXD-M2 EATON EQUAL HUBBELL EQUAL	1
Z1E	EXTERIOR LED WALLPACK WITH BACKUP BATTERY/DRIVER	LED	>70	NO	4000K	1414	20.4	120	SURFACE	LITHONIA: DLWP LED-P1-40K-120-PE-DDB IOTA: IIS-25-I EATON EQUAL HUBBELL EQUAL	1
Z2	LED POST TOP LIGHT WITH INTEGRAL PHOTOCELL AND POLE	LED	>70	NO	4000K	37638	416	120	POLE	LITHONIA: CSX2-LED-120C-1000-40K-TFTM-MVOLT-HS EATON EQUAL HUBBELL EQUAL	1
X1	LED EXIT SIGN, SINGLE SIDED, BATTERY BACKUP	LED	N/A	N/A	N/A	N/A	1.3	MVOLT	SURFACE	LITHONIA: LE-S-W-1-ELN EATON EQUAL HUBBELL EQUAL	1, 2
XX1	LED EXIT SIGN, HIGH ABUSE, WATER PROOF, BATTERY BACKUP	LED	N/A	N/A	N/A	N/A	2.7	MVOLT	SURFACE	LITHONIA: WLTE-W-1-R-EL EATON EQUAL HUBBELL EQUAL	1, 2

NOTES:
1 ARCHITECT TO SELECT FINISH FROM MANUFACTURERS FULL LINE
2 EXIT SIGNS TO BE PROVIDED WITH UNIVERSAL MOUNTING HARDWARE
3 CONTRACTOR RESPONSIBLE FOR ALL ADDITIONAL HARDWARE REQUIRED TO MOUNT FIXTURE AS INDICATED ON PLANS

PANEL 'P1'

BRANCH CIRCUIT PANELBOARD

VOLTAGE		3 PHASE	POLES	MAIN AMPS			MAIN TYPE		A. I. RATING	MOUNTING		
120/208		4 WIRE	54	250			MLO		22,000	SURFACE		
POLE	BREAKER		LOAD SERVED	PHASE LOADS					LOAD SERVED	BREAKER		POLE
NO.	TRIP	P		KVA	A	B	C	KVA		TRIP	P	NO.
1	20	1	LIGHTS EXTERIOR	0.8	2.2			1.4	REC: ADMIN. OFFICE 101	20	1	2
3	20	1	LIGHTS OFFICE	1.1		2.0		0.9	REC: MECH. OFFICE 102	20	1	4
5	20	1	LIGHTS OFFICE	0.7			1.7	1.0	REC: EWC	20	1	6
7	20	1	SPARE	0.5	1.4			0.9	REC: STORAGE M100	20	1	8
9	40	2	OVEN	2.5		2.5		0.0	REC: WOMENS RR 105	20	1	10
11	-	-	-	2.5			2.5	0.0	REC: MENS RR 104	20	1	12
13	20	1	REC: BREAKROOM ABOVE COUNTER	0.2	2.0			1.8	REC: TRAINING 108 / BREAKROOM 103	20	1	14
15	20	1	REFRIGERATOR	1.0		2.3		1.3	REC: MAINTENANCE 107, EXT.	20	1	16
17	20	1	REC: GARAGE DOOR	1.2			1.7	0.5	SPARE	20	1	18
19	20	1	REC: GARAGE DOOR	1.2	1.7			0.5	SPARE	20	1	20
21	20	1	REC: GARAGE DOOR	1.2		1.7		0.5	ELEC. CORD REEL W/DUPLEX REC.	20	1	22
23	20	1	REC: GARAGE DOOR	1.2			1.7	0.5	ELEC. CORD REEL W/DUPLEX REC.	20	1	24
25	20	1	REC: GARAGE DOOR	1.2	1.7			0.5	REC: BUS GARAGE	20	1	26
27	20	1	REC: GARAGE DOOR	1.2		1.5		0.4	REC: BUS GARAGE	20	1	28
29	20	1	REC: GARAGE DOOR	1.2			1.5	0.4	REC: BUS GARAGE	20	1	30
31	20	1	REC: GARAGE DOOR	1.2	1.7			0.5	REC: BUS GARAGE	20	1	32
33	20	1	RECEPT. TIRE LIFT	1.0		1.4		0.4	REC: BUS GARAGE	20	1	34
35	20	1	EXT. BAY RECEPTS. PLAN SOUTH	0.7			1.1	0.4	REC: BUS GARAGE	20	1	36
37	20	1	EXT. BAY RECEPTS. PLAN NORTH	0.7	1.1			0.4	REC: BUS GARAGE	20	1	38
39	15	1	RECIRC PUMP	0.5		1.0		0.5	REC: BUS GARAGE	20	1	40
41	15	2	EF-4	0.3			0.7	0.4	REC: BUS GARAGE	20	1	42
43	-	-	-	0.3	0.7			0.4	REC: BUS GARAGE	20	1	44
45	15	2	EF-5	0.4		0.9		0.5	REC: BUS GARAGE	20	1	46
47	-	-	-	0.4			0.8	0.4	REC: BUS GARAGE	20	1	48
49	20G	1	REC: WALL MOUNTED FAN	0.5	0.9			0.4	REC: BUS GARAGE	20	1	50
51	20G	1	REC: WALL MOUNTED FAN	0.5		0.9		0.4	REC: BUS GARAGE	20	1	52
53	20G	1	REC: WALL MOUNTED FAN	0.0			0.0	0.0	REC: WALL MOUNTED FAN	20G	1	54
55	20	1	REC: WASH BAY, EXT.	0.7	1.9			1.1	LIGHTS GARAGE BAY	20	2	56
57	20	3	REC: POWER WASHER	1.0		2.1		1.1	-	-	-	58
59	-	-	-	1.0			1.6	0.6	LIGHTS WASH BAY	20	2	60
61	-	-	-	1.0	1.6			0.6	-	-	-	62
63	20	1	MICROWAVE	1.5		4.5		3.0	AHU-1	40	2	64
65	30	2	HP-1	1.5			4.5	3.0	-	-	-	66
67	-	-	-	1.5	2.0			0.5	TANK CNTRL PNL	20	1	68
69	-	-	SPACE	0.0		0.0		0.0	SPACE	-	-	70
71	-	-	SPACE	0.0			0.0	0.0	SPACE	-	-	72
			PHASE TOTALS:		18.7	20.8	17.7		TOTAL: 57.3	KVA		

NOTES:
1
2.

ABBREVIATIONS:
G - GFCI BREAKER
A - AFCI BREAKER
L - LOCKOUT BREAKER
S - SHUNT TRIP BREAKER
C - COMBINATION GFCI/AFCI BREAKER
MCB - MAIN CIRCUIT BREAKER
MLO - MAIN LUG ONLY

PANEL 'P2'

BRANCH CIRCUIT PANELBOARD

VOLTAGE		3 PHASE	POLES	MAIN AMPS			MAIN TYPE		A. I. RATING	MOUNTING		
120/208		4 WIRE	54	150			MLO		22,000	SURFACE		
POLE	BREAKER		LOAD SERVED	PHASE LOADS					LOAD SERVED	BREAKER		POLE
NO.	TRIP	P		KVA	A	B	C	KVA		TRIP	P	NO.
1	20	1	BUS RECEPT. #1	1.2	2.4			1.2	BUS RECEPT. #5	20	1	2
3	20	1	BUS RECEPT. #1	1.2		2.4		1.2	BUS RECEPT. #5	20	1	4
5	20	1	BUS RECEPT. #2	1.2			2.4	1.2	BUS RECEPT. #6	20	1	6
7	20	1	BUS RECEPT. #2	1.2	2.4			1.2	BUS RECEPT. #6	20	1	8
9	20	1	BUS RECEPT. #3	1.2		2.4		1.2	BUS RECEPT. #7	20	1	10
11	20	1	BUS RECEPT. #3	1.2			2.4	1.2	BUS RECEPT. #7	20	1	12
13	20	1	BUS RECEPT. #4	1.2	2.4			1.2	BUS RECEPT. #8	20	1	14
15	20	1	BUS RECEPT. #4	1.2		2.4		1.2	BUS RECEPT. #8	20	1	16
17	20	-	SITE LIGHT POLES	0.4			1.2	0.8	SITE LIGHT POLES	20	2	18
19	-	-	-	0.4	1.2			0.8	-	-	-	20
21	20	2	SITE LIGHT POLES	0.6		2.1		1.5	TIRE CHANGER	20	2	22
23	-	-	-	0.6			2.1	1.5	-	-	-	24
25	20	2	EH-1	1.3	2.8			1.5	TIRE BALANCER	20	2	26
27	-	-	-	1.3		2.8		1.5	-	-	-	28
29	20	2	EH-2	1.3			1.8	0.5	SPARE	20	1	30
31	-	-	-	1.3	1.8			0.5	SPARE	20	1	32
33	-	-	SPACE	0.0		0.0		0.0	SPACE	-	-	34
35	-	-	SPACE	0.0			0.0	0.0	SPACE	-	-	36
37	-	-	SPACE	0.0	0.0			0.0	SPACE	-	-	38
39	-	-	SPACE	0.0		0.0		0.0	SPACE	-	-	40
41	-	-	SPACE	0.0			0.0	0.0	SPACE	-	-	42
			PHASE TOTALS:		12.9	12.1	9.9		TOTAL: 34.8	KVA		

NOTES:
1.
2.

ABBREVIATIONS:
G - GFCI BREAKER
A - AFCI BREAKER
L - LOCKOUT BREAKER
S - SHUNT TRIP BREAKER
C - COMBINATION GFCI/AFCI BREAKER
MCB - MAIN CIRCUIT BREAKER
MLO - MAIN LUG ONLY

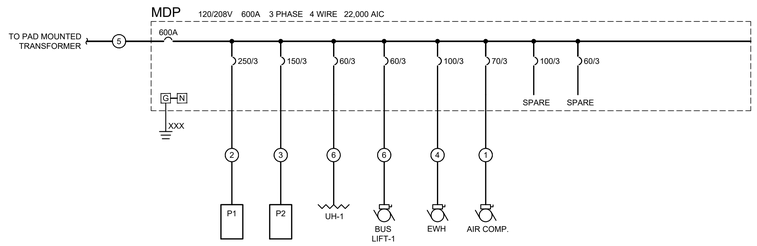

ONE LINE SCHEDULE	
1	3#4, 1#8G, 1-1/4"C
2	4#250, 1#4G, 3"C
3	4#1/0, 1#6G, 2"C
4	3#1, 1#8G, 1-1/2"C
5	(2 SETS) 4#350, 3-1/2"C
6	3#4, 1#10G, 1-1/4"C

SHERMAN CARTER BARNHART ARCHITECTS

SHROUT TATE WILSON MECHANICAL AND ELECTRICAL ENGINEERS
Lexington - Louisville
www.ctweng.com

NEW SPENCER COUNTY BUS GARAGE
TAYLORSVILLE, KENTUCKY

ELECTRICAL SCHEDULES & POWER ONE-LINE DIAGRAM

JOB NO.	1745
DATE	12/16/2019
DRAWN	JE
CHECKED	WC

COPYRIGHT © 2019
SHERMAN CARTER BARNHART ARCHITECTS, PLLC

REVISIONS

No.	Description	Date

SHEET
E4