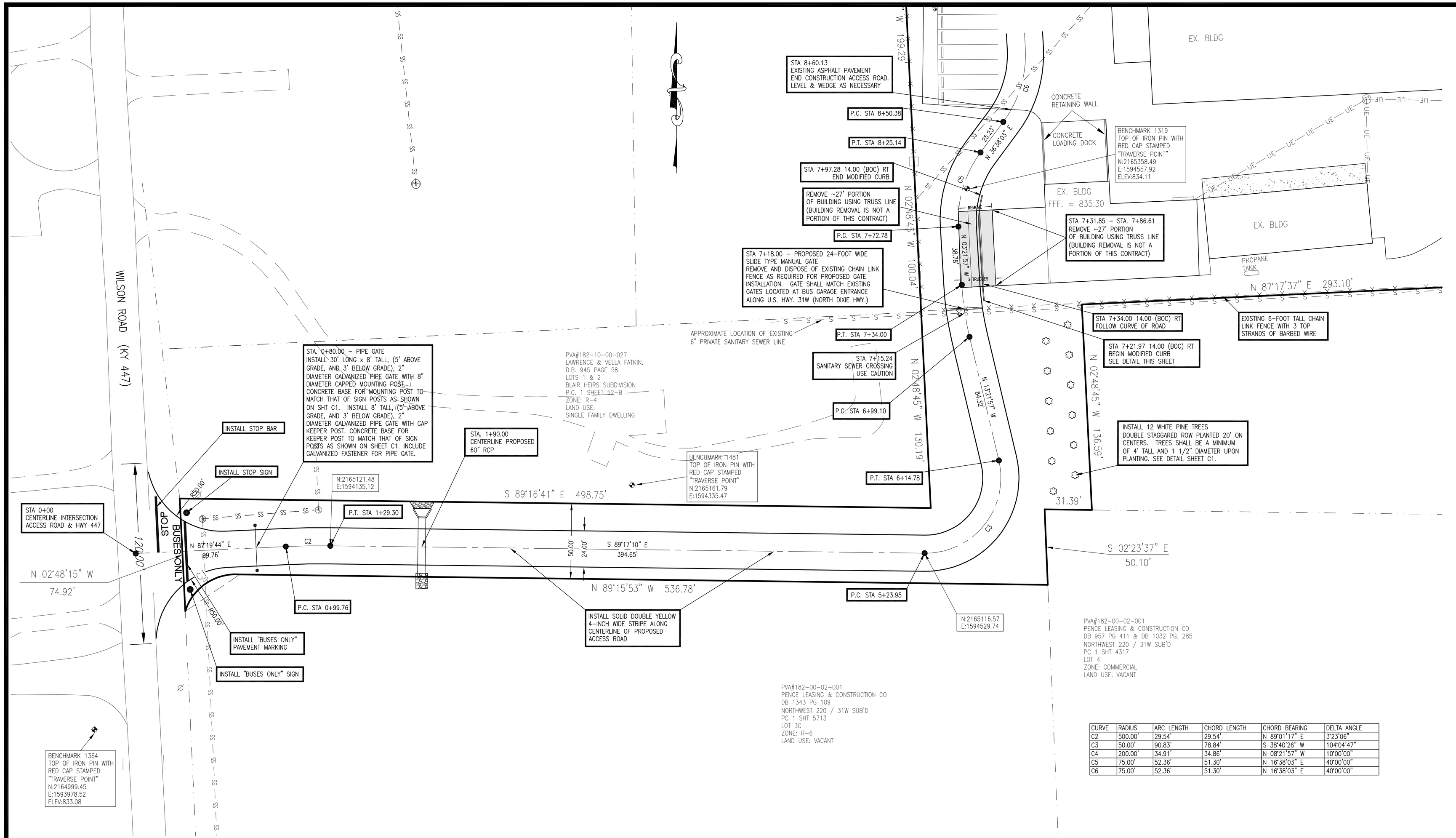


| CURVE | RADIUS | ARC LENGTH | CHORD LENGTH | CHORD BEARING | DELTA ANGLE |
|---|---|---|---|---|---|
| C2 | 500.00' | 29.54' | 29.54' | N 89°01'17" E | 3°23'06" |
| C3 | 50.00' | 90.83' | 78.84' | S 38°40'26" W | 104°04'47" |
| C4 | 200.00' | 34.91' | 34.86' | N 08°21'57" W | 10°00'00" |
| C5 | 75.00' | 52.36' | 51.30' | N 16°38'03" E | 40°00'00" |
| C6 | 75.00' | 52.36' | 51.30' | N 16°38'03" E | 40°00'00" |

## LEGEND

- EXISTING FIRE HYDRANT
- EXISTING WATER VALVE
- EXISTING UTILITY POLE
- PROPERTY LINE
- ADJOINING PROPERTY LINE
- W — W — EXISTING WATER LINE
- 835.11 EXISTING SPOT ELEVATION
- 835.11 PROPOSED SPOT ELEVATION

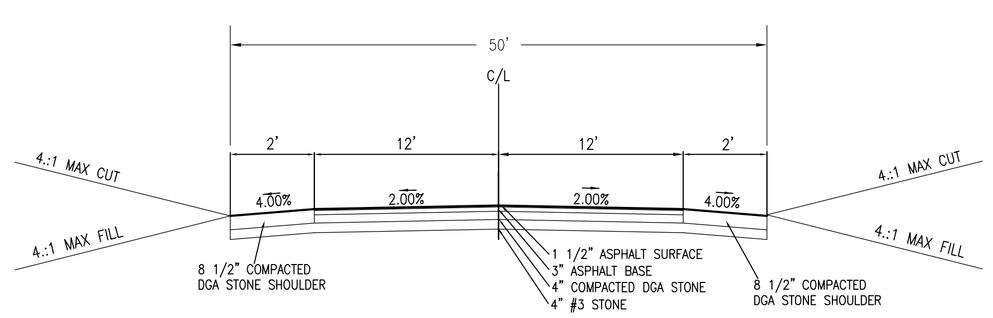


TYPICAL STREET SECTION

SCALE: NONE

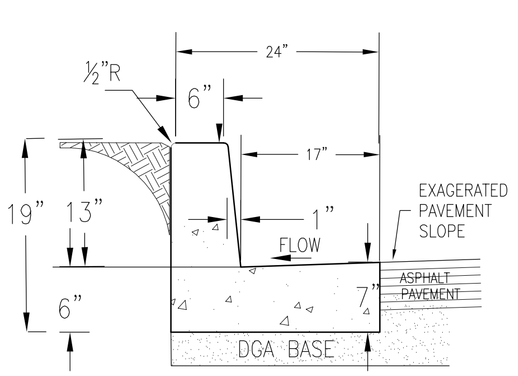


MODIFIED CURB & GUTTER

1) CURB & GUTTER SHALL CONSIST OF 4000 PSI CONCRETE.
2) CURBING SHALL BE INSTALLED WITH CONTROL JOINTS AT EVERY 8' ON CENTER.
3) CONTROL JOINTS SHALL BE INSTALLED AT ALL P.C. AND P.T. AND AT THE CENTER OF A RADIUS.
4) WHERE COLD JOINTS ARE USED IN INSTALLING THE CURB A 3/4" PREMOLDED EXPANSION JOINT SHALL BE INSTALLED, WHEN THE PROJECT IS COMPLETE THE JOINT SHALL BE CAULKED, ADDITIONALLY DEFLECT MOISTURE FROM THE BUILDING REVISED FOR THE ACCESS ROAD.
5) THE CONTRACTOR SHALL TAPER THE CURB AT ALL TERMINUS POINT. TAPER LENGTH SHALL BE APPROXIMATELY 3-FOOT AND SHALL TRANSITION FROM FULL 12-INCH CURB HEIGHT TO NOTHING.
6) PERMIT WATER MOVEMENT THROUGH OR BENEATH CURBS AT THE SUBGRADE LEVEL, EXCEPT WHERE THE BUILDING WALL SIDES THE CURB, IN WHICH CASE PROVIDE WATER TIGHT SEAL.

\HCBE\HARDIN-BUS-GARAGE\ACCESS-ROAD\WILSON-ROAD-ACCESS-ROAD.DWG

# ACCESS ROAD BUS GARAGE SITE PLAN

Engineering Design Group
EDG
LAND DEVELOPMENT • SITE DESIGN • SUBDIVISION

SCALE: 1" = 30'
120' 60' 30' 15' 0' -30'

ENGINEER / SURVEYOR:
ENGINEERING DESIGN GROUP, INC
115 SOUTH MULBERRY ST
P.O. BOX 2484
ELIZABETHTOWN, KY. 42702-2484
(270) 769-1436 (270)765-9908 FAX
MBILLINGS@ENGDESGRP.COM

DATE: NOVEMBER 13, 2015

CLIENT:
HARDIN COUNTY BOARD OF EDUCATION
65 W.A. JENKINS ROAD
ELIZABETHTOWN, KY. 42701
(270) 769-8800
P.O.C. GARY MILBY

## BUS GARAGE BUILDING FOR HARDIN COUNTY BOARD OF EDUCATION

6269 NORTH DIXIE HIGHWAY
ELIZABETHTOWN KENTUCKY 42701

C2